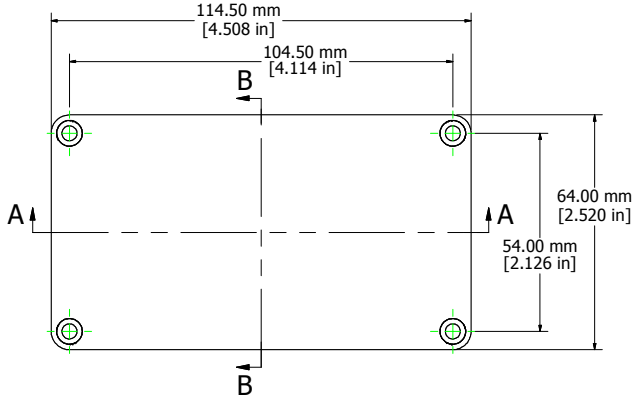

Top View of Assembly

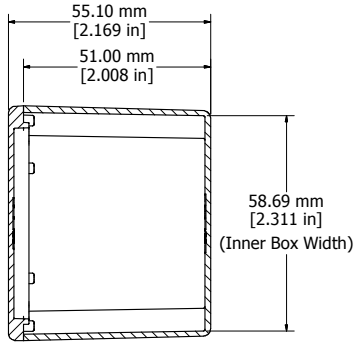

SECTION B-B
End View of Assembly



Enclosures can be Factory Modified (Milling, Drilling, Printing etc.)
Contact Factory mjm@hammondmfg.com for quotes
Solid models of this enclosure available in STEP or IGES.

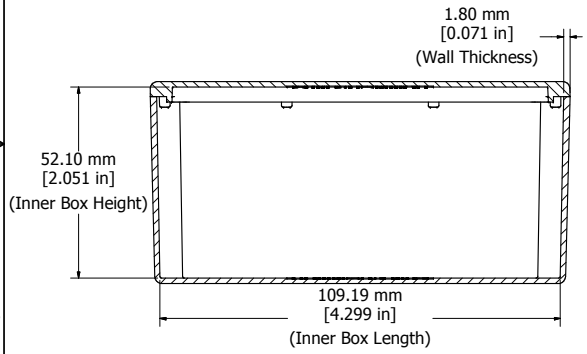

SECTION A-A
Side View of Assembly

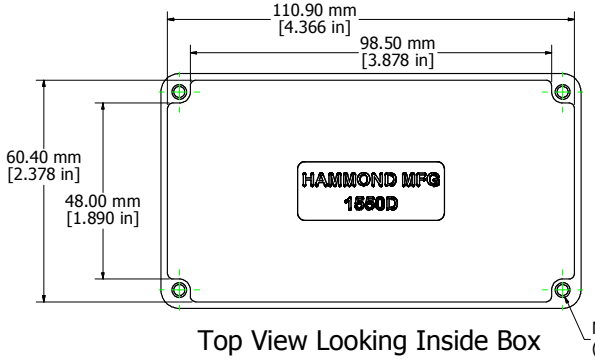

Top View Looking Inside Box

NOTE
Purchased assembly includes box, lid, and 4 cover screws. Box and lid are made from Diecast Aluminum Alloy. EVA Foam Gasket supplied with Liquid Resistant Enclosures

PART NUMBERS	
1550D Enclosure	
Unfinished	1550D
Black Textured Polyester Powder Paint	1550DBK
1550WD Liquid Resistant Enclosure	
Unfinished	1550WD
Black Textured Polyester Powder Paint	1550WDBK
Accessories	
Recommended Torque: 75 ozf.in / 55 cN.m	
Unfinished Cover Screws (Pkg 100) [M3.5 x 0.6 18-8 SS]	1550MS100

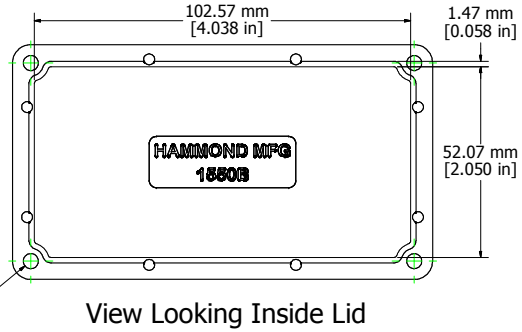

View Looking Inside Lid

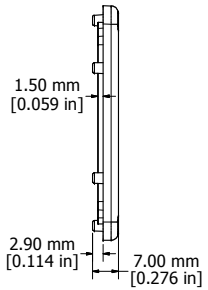

HAMMOND MANUFACTURING™

1550D

www.hammondmfg.com