ISO 15552, series CCL-IS

R480058941

General series information
AVENTICS Series CCL-IS Standard cylinders (ISO 15552)

- The CCL-IS (Cylinder Clean Line - ISO Standard) series cylinders complement the PRA series in the area of hygienic design and meet all requirements for use in the food sector. A special feature is the option to configure the air connections for supply and exhaust on just the base, which increases flexibility when designing the system's tubing concept..
- Optional: through piston rod, dry-run scraper, modular scraper system, lube unit, heat-resistant, especially high corrosion resistance, ATEX



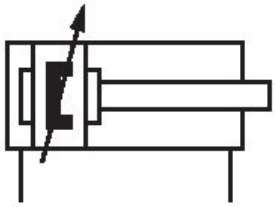

Technical data

Industry	Industrial
Standards	ISO 15552
Piston Ø	50 mm
Stroke	400 mm
Ports	G 1/4
Functional principle	Double-acting
Cushioning	Pneumatic adjustable cushioning
Magnetic piston	Piston with magnet
Environmental requirements	Industry standard suitable for use in food processing ATEX optional High corrosion
Piston rod	single
Scraper	Standard Industry Scraper
Pressure for determining piston forces	6,3 bar

Retracting piston force	1039 N
Extracting piston force	1237 N
Min. ambient temperature	-20 °C
Max. ambient temperature	80 °C
Working pressure min.	1.5 bar
Working pressure max	10 bar
Piston rod thread	M16x1,5
Cushioning length	17 mm
Cushioning energy	15 J
Weight 0 mm stroke	1.37 kg
Weight +10 mm stroke	0.065 kg
Stroke max.	2100 mm
Medium	Compressed air
Min. medium temperature	-20 °C
Max. medium temperature	80 °C
Max. particle size	50 µm
Oil content of compressed air min.	0 mg/m³
Oil content of compressed air max.	5 mg/m³

Material

Piston rod	Stainless Steel
Scraper material	Polyester
Material tie-rod	Stainless Steel
Material, front cover	Aluminum
Cylinder tube	Aluminum
End cover	Aluminum
Part No.	R480058941

Technical information

Further options can be generated in the Internet configurator.

ATEX-certified cylinders with identification II 2G Ex h IIC T4 Gb / II 2D Ex h IIIC T135°C Db_X can be generated in the Internet configurator.

The operating temperature range for ATEX-certified cylinders is -20°C ... 60°C.

Ø25 not according to ISO 15552

The pressure dew point must be at least 15 °C less than ambient and medium temperature and may not exceed 3 °C.

Ø25 not according to ISO 15552

The material for heat-resistant scraper and seal variants (ambient temperature: -10 °C ... 120 °C) is PTFE.

Dimensions

Ø 25 - 63

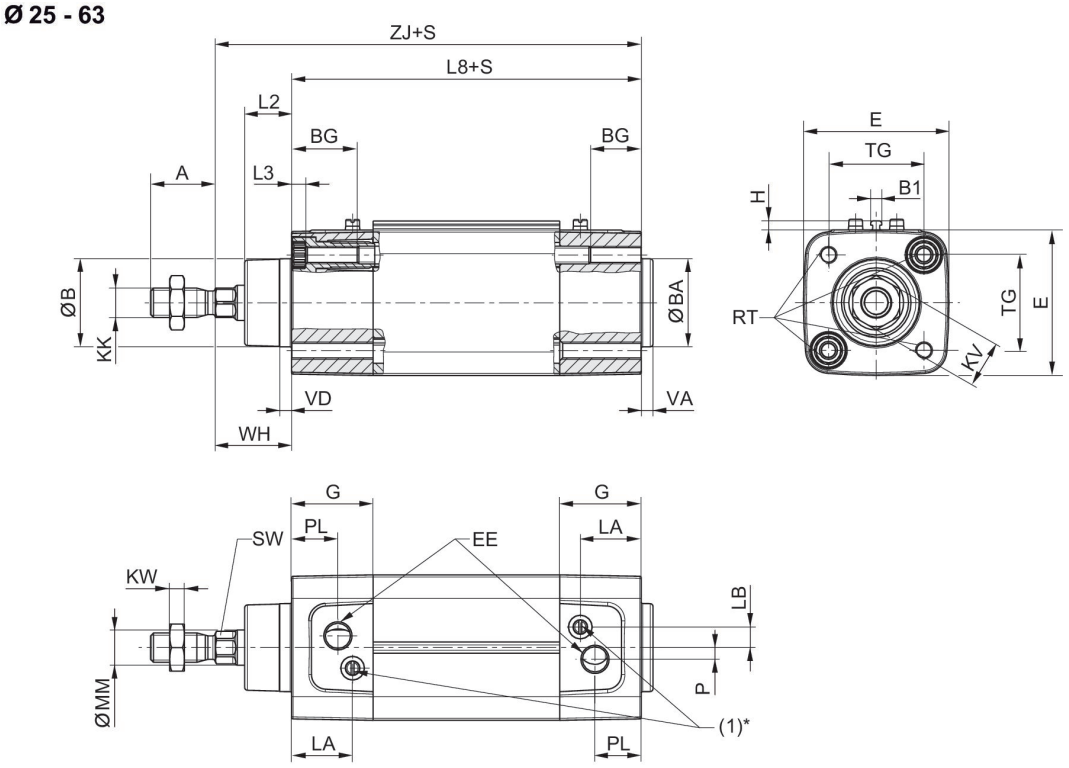

Ø80 - 125

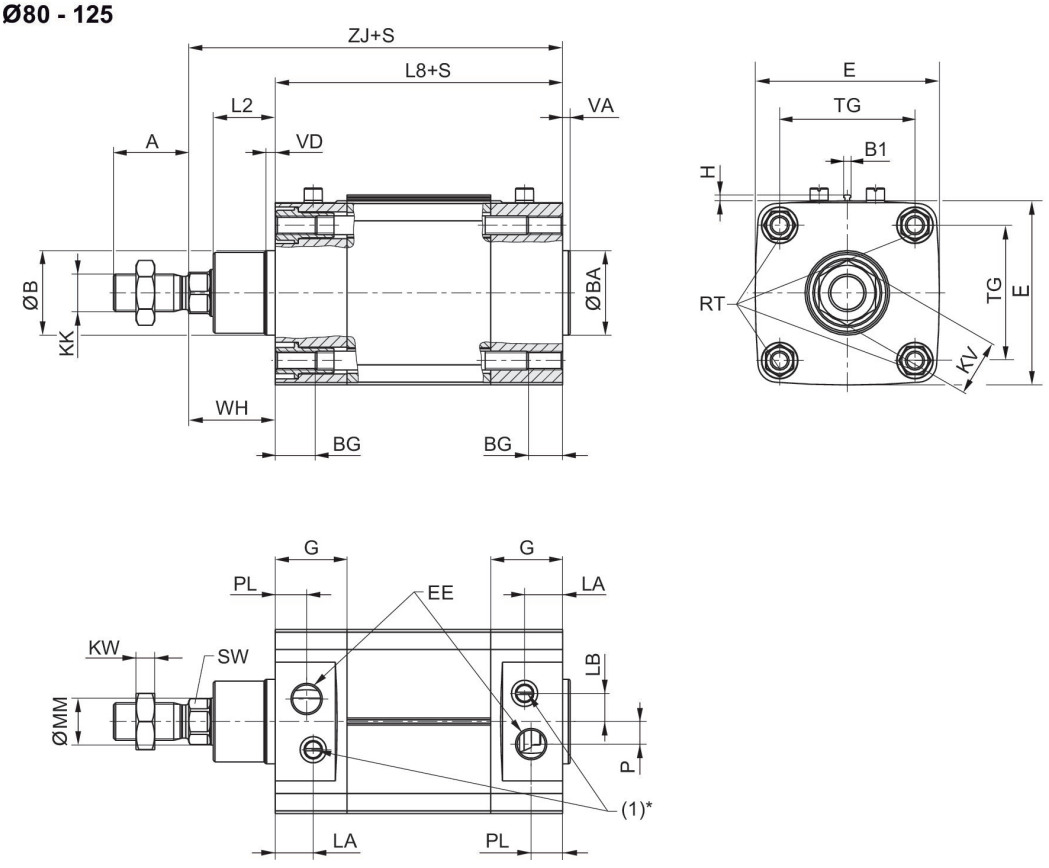

S = stroke
* The flow control screw (1) only has a function in cylinders with adjustable cushioning.

Cushioning diagram

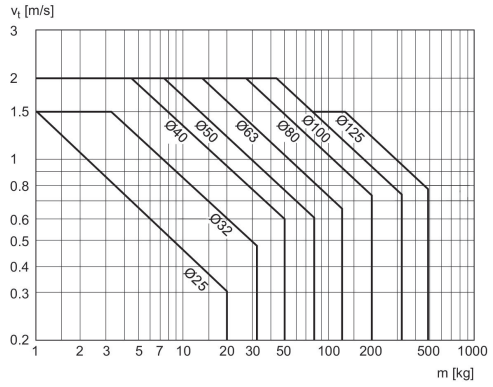

V = velocity [m/s]
m = mass

Overview drawing

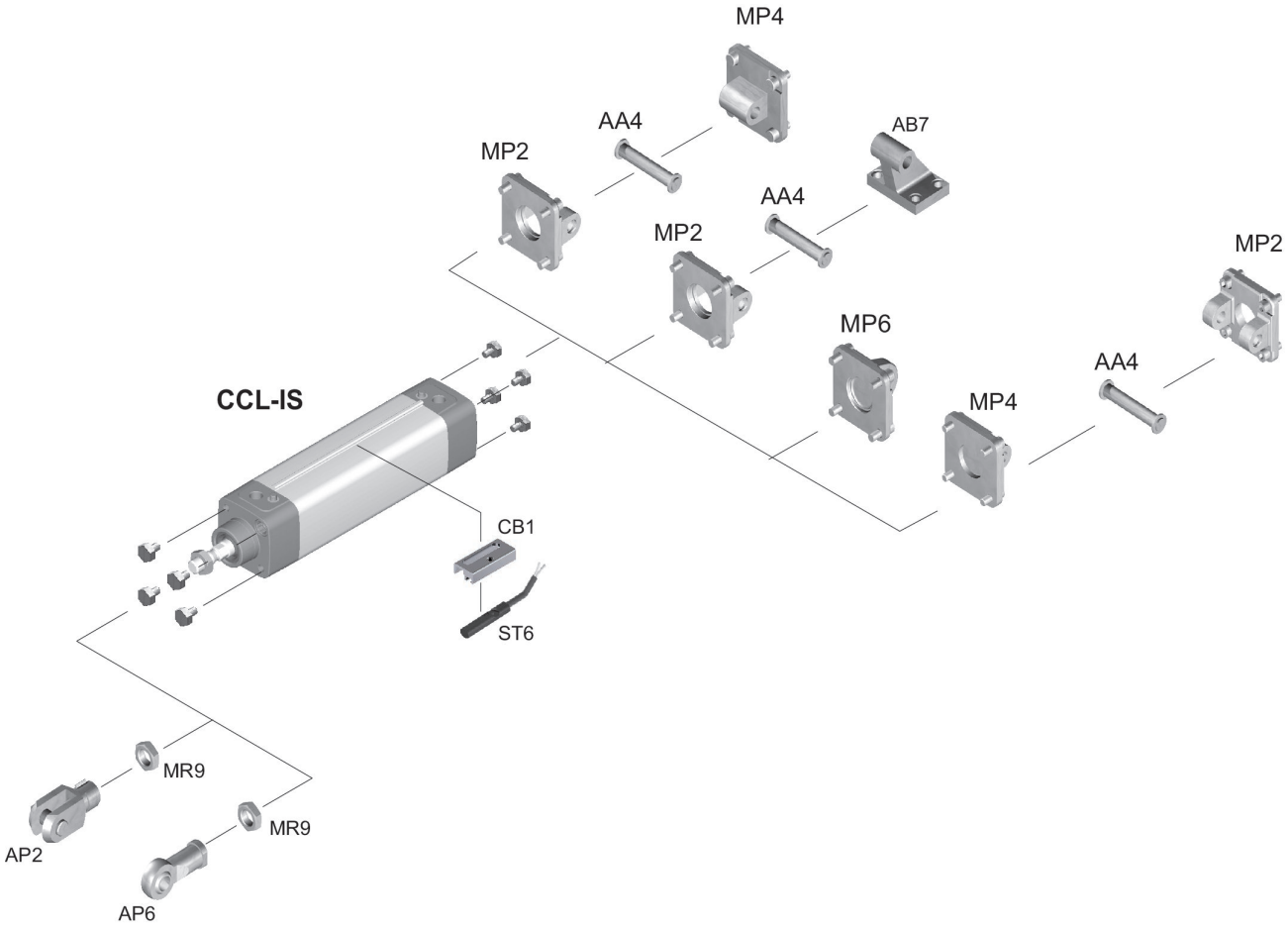

NOTE: This overview drawing is only for orientation to indicate where the various accessory parts can be fastened to the cylinder. The illustration has been simplified for this purpose. It is thus not possible to derive the dimensions from this overview.

Piston Ø	A	ØB / ØBA d11	B1	BG mm	E	EE	G	H	KK
25	22	24	3.8	12.5	40.5	G1/8	20	3.1	M10x1,25
32	22	30	3.8	16	49.5	G1/8	27.75	3.1	M10x1,25
40	24	35	3.8	16	57.5	G1/4	33.25	3.1	M12x1,25
50	32	40	3.8	16	69.5	G1/4	31	3.1	M16x1,5
63	32	45	3.8	16	79.5	G3/8	38,25	3.1	M16x1,5
80	40	45	3.8	17	98	G3/8	38,25	3.1	M20x1,5
100	40	55	3.8	17	115,5	G1/2	42,25	3.1	M20x1,5
125	54	60	3.8	20	145	G1/2	54	3.1	M27x2

Piston Ø	KV	KW	L2	L3 max.	L8	LA	LB	MM f8	P
25	16	5	16	5	74 ±0,4	13.5	6	12	4.5
32	16	5	16	5	94 ±0,4	20.75	7	12	4
40	18	6	18.25	5	105 ±0,7	22.75	8	16	5
50	24	8	25	5	106 ±0,7	20	12	20	7,7
63	24	8	25	5	121 ±0,8	27,25	11	20	11
80	30	10	33	-	128 ±0,8	20,25	15	25	12
100	30	10	36	-	138 ±1	24,25	14	25	17
125	41	13,5	45	-	160 ±1	25,5	4	32	27,5

Piston Ø	PL	RT	SW	TG	VA	VD	WH	ZJ
25	10.3	M5	10	26 ±0,4	-	-	24 ±1,4	98
32	15.75	M6	10	32,5 ±0,5	4	4	26 ±1,4	120
40	16.75	M6	13	38 ±0,5	4	5	30 ±1,4	135
50	16	M8	17	46,5 ±0,6	4	5	37 ±1,4	143
63	19,25	M8	17	56,5 ±0,7	4	5	37 ±1,8	158
80	16,75	M10	22	72 ±0,7	4	5	46 ±1,8	174
100	19,25	M10	22	89 ±0,7	4	5	51 ±1,8	189
125	20	M12	27	110 ±1,1	6	6	65 ±2,2	225