AC axial compact fan

ebm-papst Mulfingen GmbH & Co. KG
Bachmühle 2 · D-74673 Mulfingen
Phone +49 7938 81-0
Fax +49 7938 81-110
info1@de.ebmpapst.com
www.ebmpapst.com

Limited partnership · Headquarters Mulfingen
Amtsgericht (court of registration) Stuttgart · HRA 590344

General partner Elektrobau Mulfingen GmbH · Headquarters Mulfingen
Amtsgericht (court of registration) Stuttgart · HRB 590142

Nominal data

Type	**W2E143-AB15-01**
Motor	**M2E052-BF**

Phase		1~	1~	1~
Nominal voltage	VAC	115	115	115
Frequency	Hz	50	60	60
Method of obtaining data		fa	fa	fa
Valid for approval/standard		CE	CE	UL 507
Speed (rpm)	min^{-1}	2850	3300	
Power consumption	W	26	29	33
Current draw	A	0.25	0.26	
Capacitor	µF	3	3	3
Capacitor voltage	VDB	250	250	250
Capacitor standard		S0 (CE)	S0 (CE)	S0 (CE)
Min. ambient temperature	°C	-25	-25	-25
Max. ambient temperature	°C	60	75	75

ml = Max. load · me = Max. efficiency · fa = Free air · cs = Customer specification · ce = Customer equipment
Subject to change

AC axial compact fan

Technical description

Weight	0.95 kg
Size	143 mm
Motor size	52
Rotor surface	Rotor open, painted black
Blade material	Sheet steel, painted black
Fan housing material	Die-cast aluminum, painted black
Number of blades	5
Airflow direction	V
Direction of rotation	Counterclockwise, viewed toward rotor
Degree of protection	IP20
Insulation class	"B"
Moisture (F) / Environmental (H) protection class	H0+
Max. permitted ambient temp. for motor (transport/storage)	+ 80 °C
Min. permitted ambient temp. for motor (transport/storage)	- 40 °C
Installation position	Any
Condensation drainage holes	None, open rotor
Mode	S1
Motor bearing	Ball bearing
Touch current according to IEC 60990 (measuring circuit Fig. 4, TN system)	< 0.75 mA
Electrical hookup	Plug
Motor protection	Thermal overload protector (TOP) internally connected
Protection class	I (with customer connection of protective earth)
Motor capacitor according to EN 60252-1 in safety protection class	S0
Conformity with standards	EN 60335-1; CE
Approval	CSA C22.2 No. 113; CCC; EAC; VDE; UL 507

ebm-papst Mulfingen GmbH & Co. KG · Bachmühle 2 · D-74673 Mulfingen · Phone +49 (0) 7938 81-0 · Fax +49 (0) 7938 81-110 · info1@de.ebmpapst.com · www.ebmpapst.com

AC axial compact fan

Product drawing

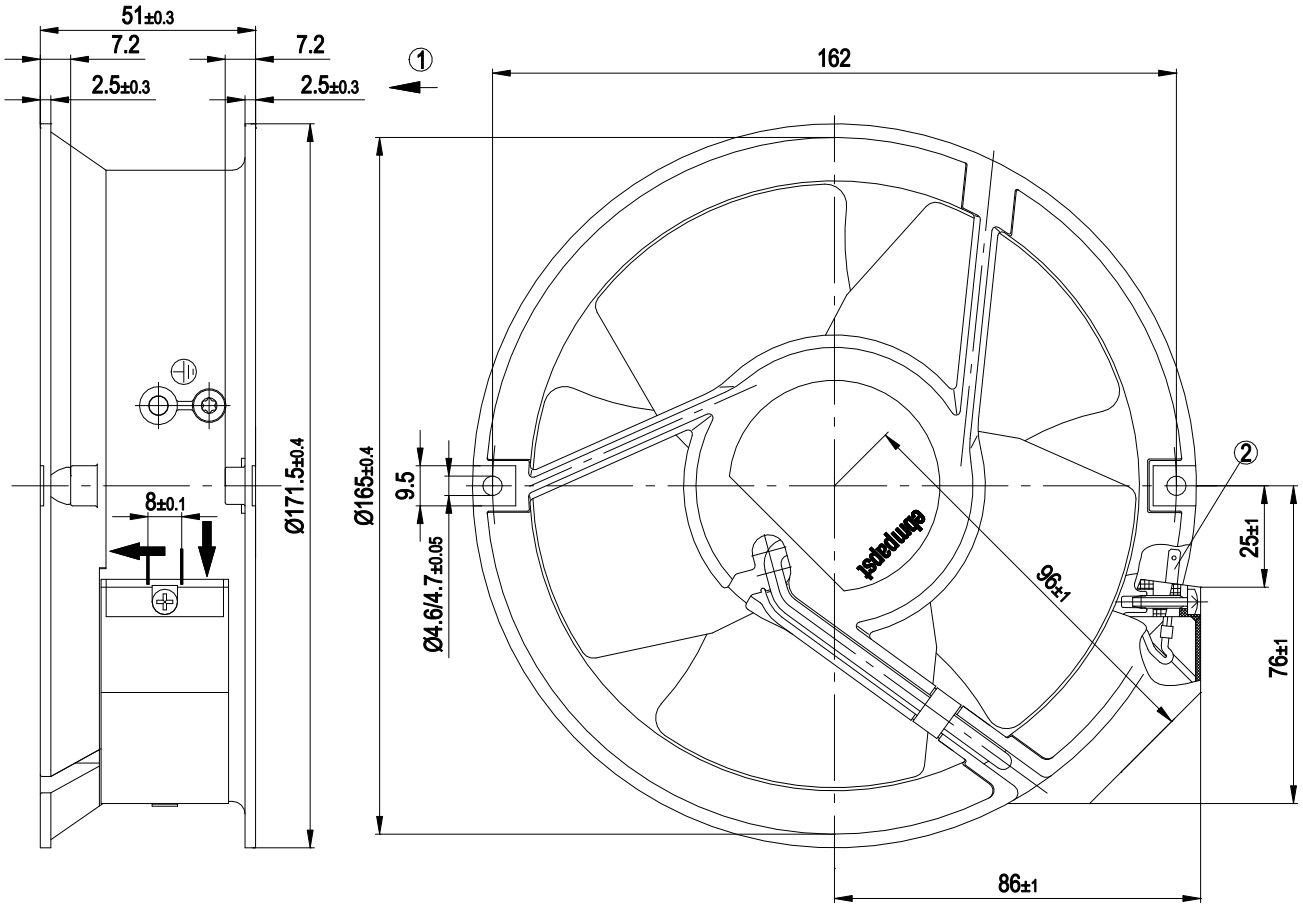

1	Direction of air flow "V"
2	Flat plug 2.8 x 0.5 mm

Connection diagram

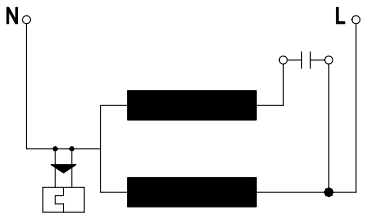

ebm-papst Mulfingen GmbH & Co. KG · Bachmühle 2 · D-74673 Mulfingen · Phone +49 (0) 7938 81-0 · Fax +49 (0) 7938 81-110 · info1@de.ebmpapst.com · www.ebmpapst.com

Curves: Air performance 50 Hz

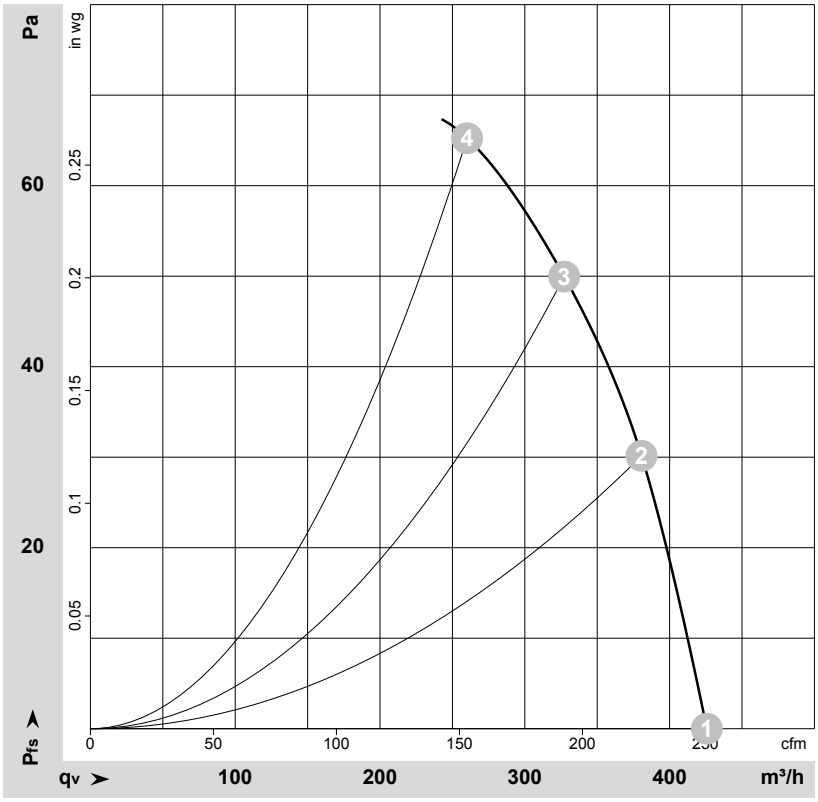

ρ = 1.15 kg/m³ ± 2 %

Measurement: LU-31564-1

Air performance measured according to ISO 5801 installation category A. For detailed information on the measurement setup, contact ebm-papst. Intake sound level: Sound power level according to ISO 13347 / sound pressure level measured at 1 m distance from fan axis. The values given are valid under the specified measuring conditions and may vary due to conditions of installation. For deviations from the standard configuration, the parameters have to be checked on the installed unit.

Measured values

	U	f	n	P_e	I	q_V	p_{fs}	q_V	p_{fs}
	V	Hz	min^{-1}	W	A	m^3/h	Pa	cfm	in. wg
1	115	50	2850	26	0.25	425	0	250	0.00
2	115	50	2790	27	0.25	380	30	225	0.12
3	115	50	2775	27	0.25	325	50	190	0.20
4	115	50	2770	28	0.26	260	65	155	0.26

U = Voltage · f = Frequency · n = Speed (rpm) · P_e = Power consumption · I = Current draw · q_V = Air flow · p_{fs} = Pressure increase

ebm-papst Mulfingen GmbH & Co. KG · Bachmühle 2 · D-74673 Mulfingen · Phone +49 (0) 7938 81-0 · Fax +49 (0) 7938 81-110 · info1@de.ebmpapst.com · www.ebmpapst.com

AC axial compact fan

Curves: Air performance 60 Hz

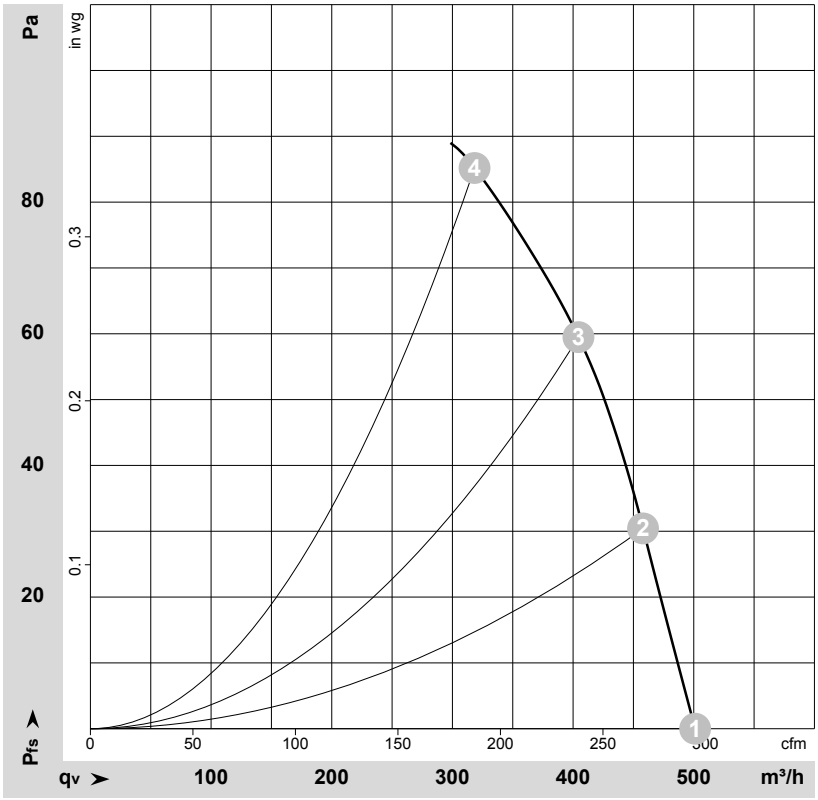

ρ = 1.15 kg/m³ ± 2 %

Measurement: LU-31565-1

Air performance measured according to ISO 5801 installation category A. For detailed information on the measurement setup, contact ebm-papst. Intake sound level: Sound power level according to ISO 13347 / sound pressure level measured at 1 m distance from fan axis. The values given are valid under the specified measuring conditions and may vary due to conditions of installation. For deviations from the standard configuration, the parameters have to be checked on the installed unit.

Measured values

	U	f	n	P_e	I	q_V	p_{fs}	q_V	p_{fs}
	V	Hz	min^{-1}	W	A	m^3/h	Pa	cfm	in. wg
1	115	60	3300	29	0.26	500	0	295	0.00
2	115	60	3230	32	0.27	460	30	270	0.12
3	115	60	3200	33	0.28	405	60	240	0.24
4	115	60	3165	34	0.29	320	85	185	0.34

U = Voltage · f = Frequency · n = Speed (rpm) · P_e = Power consumption · I = Current draw · q_V = Air flow · p_{fs} = Pressure increase

ebm-papst Mulfingen GmbH & Co. KG · Bachmühle 2 · D-74673 Mulfingen · Phone +49 (0) 7938 81-0 · Fax +49 (0) 7938 81-110 · info1@de.ebmpapst.com · www.ebmpapst.com