SCHAEFFLER

Angular contact ball bearings 7308-B-XL-TVP (Series 73..-B)

main dimensions to DIN 628-1, contact angle α = 40°

The datasheet is only an overview of dimensions and basic load ratings of the selected product. Please always observe all the guidelines in these overview pages. Further information is given on many products under the menu item "Description". You can also order comprehensive information via the Catalogue selection system (https://www.schaeffler.de/content.schaeffler.de/en/news_media/index.jsp) or by telephone on +49 (91 32) 82 - 28 97.

d	40	mm
D	90	mm
B	23	mm
a	39	mm
D_1	71,3	mm
d_1	60	mm
$D_{a\ max}$	81	mm
$d_{a\ min}$	49	mm
$D_{b\ max}$	84,4	mm
$r_{1\ min}$	1	mm
$r_{a1\ max}$	1	mm
$r_{a\ max}$	1,5	mm

r_{min}	1,5 mm	
α	40 °	Contact angle
m	0,61 kg	Mass
C_r	53000 N	Basic dynamic load rating, radial
C_{0r}	34500 N	Basic static load rating, radial
C_{ur}	2390 N	Fatigue limit load, radial
n_G	9500 1/min	Limiting speed
$n_{\vartheta r}$	7100 1/min	Reference speed

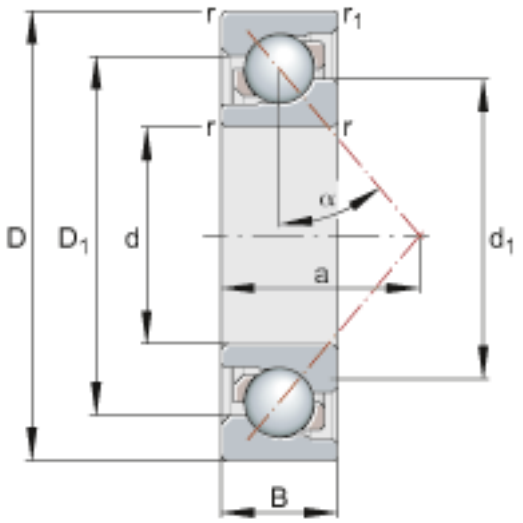

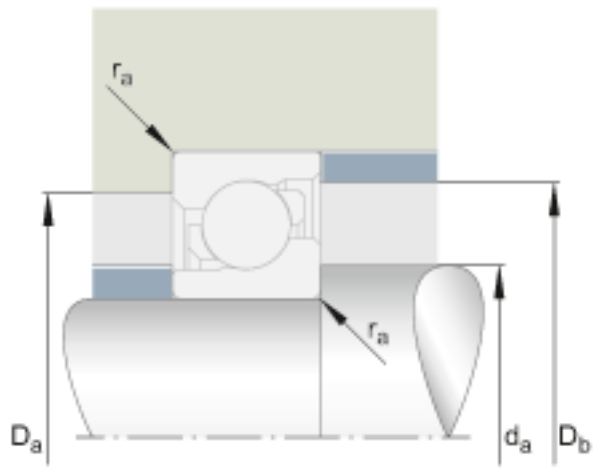
r_a
r_a
D_a
d_a
D_b

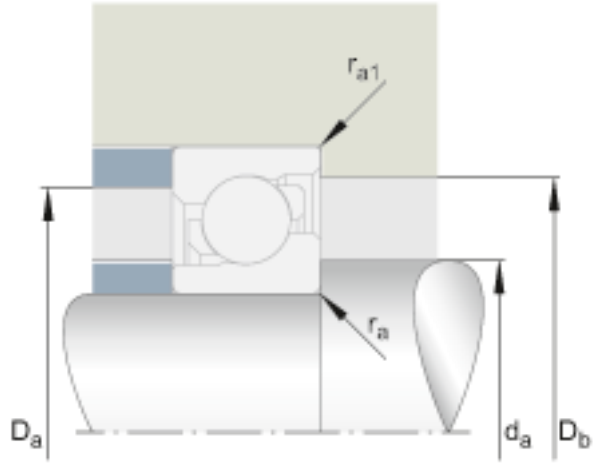
r_{a1}
r_a
D_a
d_a
D_b