Miniature Solenoid Valve - General Purpose

Sub-Base Connection

Type 6011

2/2-Way; Sub-Base Connection; 0-300 PSI



Advantages/Benefits

- **Coil can be changed easily with valve in place and without de-pressurizing the system**
- **Coil can be locked in 4x 90° positions or move freely between, as required**
- **High quality FPM (Viton) seal material, standard**
- **Type 2506 cable plug offers a wide range of options**
- **Compact design**
- **Double O-ring seal protects coil and valve assembly from moisture and corrosion for longer life**
- **CE Approval**
- **UL Approval**

Design/Function

The valves are based on a modular design consisting of three basic elements: the pressure or process containing valve assembly, a push-over coil and a standard cable plug.

The valve assembly contains: the body, guide tube, plunger, seals and springs, This assembly totally isolates the process from the coil. Once installed, the coil is also sealed at both ends from exposure to the environment.

The valves are available in brass and have high-quality FPM (Viton) seals as standard.

To simplify ordering, different combinations of orifice size, coil voltage and a standard cable plug can be ordered with one Item Number.

Options for the Type 2506 cable plug are available to satisfy special
electrical requirements.

– The modular concept provides flexibility to meet application requirements.

– This valve is interchangeable with the Type 201.

Applications

Fluids

Brass Version: Neutral gases and liquids such as compressed air, natural gas, water, hydraulic fluid and fuel oil.

Applications

- Pneumatic control
- Shut-off, dosing, filling and ventilating
- Small-scale instruments for R&D and laboratory measurements laboratory measurements
- Welding technology
- Suitable for technical vacuum

Burkert Contromatic USA
2602 McGaw Avenue
Irvine, CA 92614
Tel. 949.223.3100
Fax 949.223.3198
www.burkert-usa.com

Burkert Contromatic Inc.
760 Pacific Road, Unit 3
Oakville, Ontario, Canada
L6L 6M5
Tel. 905.847.5566
Fax 905.847.9006

bürkert Easy Fluid Control Solutions

Miniature Solenoid Valve - General Purpose **Type 6011**

Sub-Base Connection

Technical Data Type 6011

Circuit Function - A

A - 2/2-way valve, normally closed

Symbol

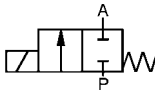

Operating Data (Valve)

Pressure Range	0-300 PSI (see specifications)
Port Connection	Sub-base connection
Orifice	3/64" - 3/32"
Fluid	**Brass Version**: Neutral gases and liquids such as compressed air, natural gas, water, hydraulic fluid, and fuel oil.
Fluid Temperature	14°F to 212°F
Max. Ambient Temperature	130°F
Max. viscosity	21 cSt
Response times	
opening:	Approx. 8ms
closing:	10-16 ms
Installation	As required, but preferably with solenoid system upright

Operating Data (Actuator)

Operating Voltages	AC 24, 120, 240 V/60 Hz, 24 VDC
Voltages Tolerance	±10%

Power Consumption

AC inrush	AC hold	DC
9 VA	6 VA/4 W	4 W

Duty Cycle	100% continuously rated
Duty Cycle for Multiple Manifolds	60% of a 30 minute period or less (i.e. 30 min cycle = 18min ON + 12min OFF) Optional 2W version available for high duty cycles.
Cycling Rate	up to 1000 c.p.m.
Protection class with cable plug	NEMA 4 (IP 65)
Electrical Connection	Delivery standard: Cable plug DIN 43 650 C, 0-250 V (See accessories for options)
Approvals	U.L. Recognized

Materials

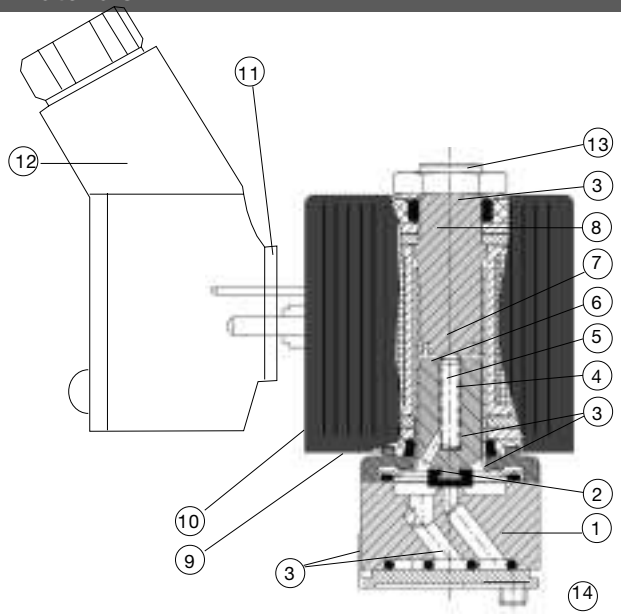

1	Valve body:	Brass (303 Stainless Steel on request)
2	Plunger-seal:	FPM (Viton)
3	O-rings:	FPM (Viton)
4	Armature guide tube:	305 Stainless Steel
5	Plunger:	430F Stainless Steel
6	Spring:	301 Stainless Steel
7	Shading ring:	Copper
8	Stopper:	430F Stainless Steel
9	Flange:	Cadmium Plated
10	Coil:	PA (Polyamide)
11	Flat seal:	NBR
12	Cable plug:	PA (Polyamide)
13	Locknut:	Zinc Plated
14	Mounting screw	DIN 84-4.8 A2L

Specifications - Ordering Chart

Brass Body, FPM (Viton) Seal

(with standard-cable plug 0-250 V AC/DC)

Circuit Function	Orifice [inch]	C_V Rating	SCFM Air[1]	Pressure Range[2] [PSI] AC	Pressure Range[2] [PSI] DC	Port Connection [inch]	Voltage/ Frequency [V/Hz]	Weight [lbs.]	**Item No.** (Stainless Steel Body)	**Item No.** (Brass Body)
A	3/64	0.052	1.69	0–300	0-170	Sub-base	24VDC	.2	on request	456 792 V
				0–300	0-170		24/60			456 793 W
				0–300	0-170		120/60			456 794 X
				0–300	0-170		240/60			456 795 Y
	1/16	0.07	2.29	0–170	0- 85	Sub-base	24VDC	.2	on request	456 796 Z
				0–170	0- 85		24/60			456 797 S
				0–170	0- 85		120/60			456 798 B
				0–170	0- 85		240/60			456 799 C
	5/64	0.13	4.24	0–115	0-65	Sub-base	24VDC	.2	on request	456 800 A
				0–115	0-65		24/60			456 801 X
				0–115	0-65		120/60			456 802 Y
				0–115	0-65		240/60			456 803 Z
	3/32	0.15	4.94	0–85	0-42	Sub-base	24VDC	.2	on request	456 804 S
				0–85	0-42		24/60			456 805 T
				0–85	0-42		120/60			456 806 U
				0–85	0-42		240/60			456 807 V

[1] Measured with 85 PSI upstream pressure and 15 PSI pressure drop across the valve at 68°F.
[2] All pressures quoted are gauge pressures.

Dimensions [inch (mm)]

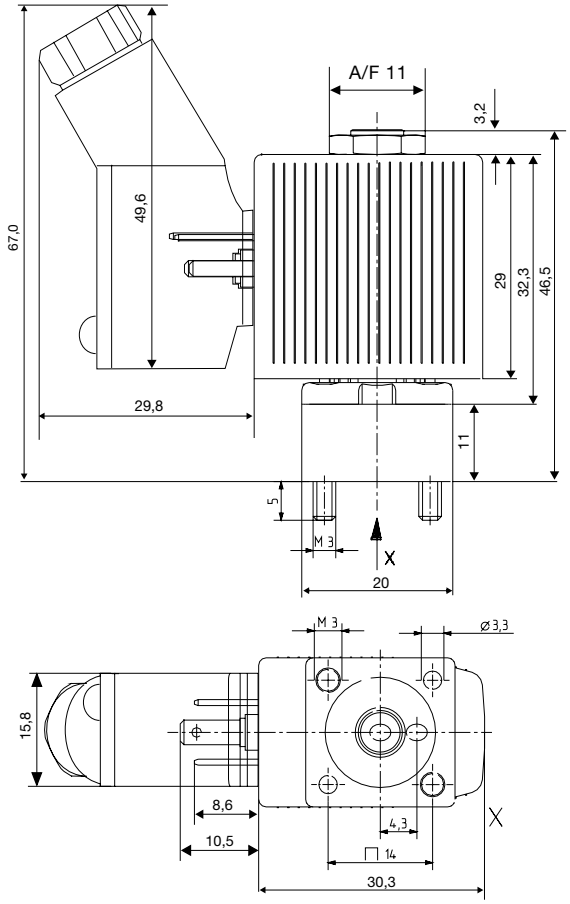

View without cable plug

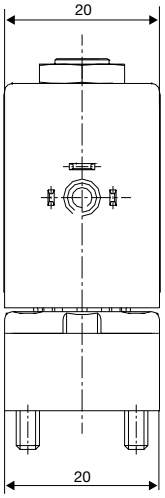

Dimensions Accessories [(in (mm))]

Manifolds

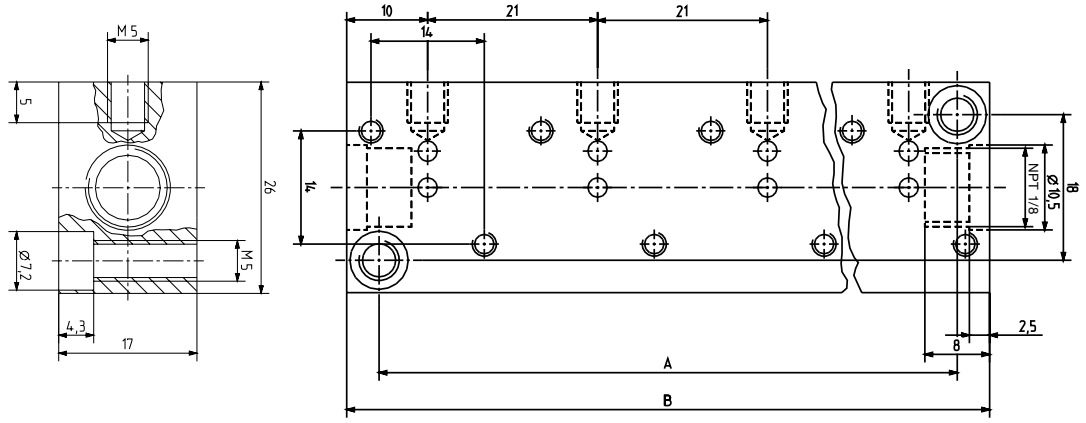

Manifold Mounting

The manifolds for 1 to 8 valves have a common pressure inlet and individual outlet for each valve. The Type 6011 may also be mounted together with the Type 6012 valves (circuit function C, de-energized, outlet A exhausted) on the same manifold. The electrical connection can be either to the right or left of the manifold.

Manifolds may be coupled together using special push-fit O-ring connection nipples for linking the pressure inlets P. Manifolds joined together in this way should be securely mounted.

Ordering Chart for Manifolds/Accessories

Device/Accessory	Description			Item-No.
Single Manifold	Aluminium			613 984 K
Multiple Manifold (Aluminium)	Hole Spacing A	Overall Length B		
2 valves	1.30	1.61		006 113 M
3 valves	2.13	2.44		613 838 Y
4 valves	3.00	3.27		006 114 N
5 valves	3.78	3.98		613 839 Z
6 valves	4.61	4.92		613 840 E
7 valves	5.44	5.75		613 841 T
8 valves	6.26	6.58		613 842 U
Connecting Nipple	with O-rings			005 040 A

Cable Plug to DIN 43650, Form C

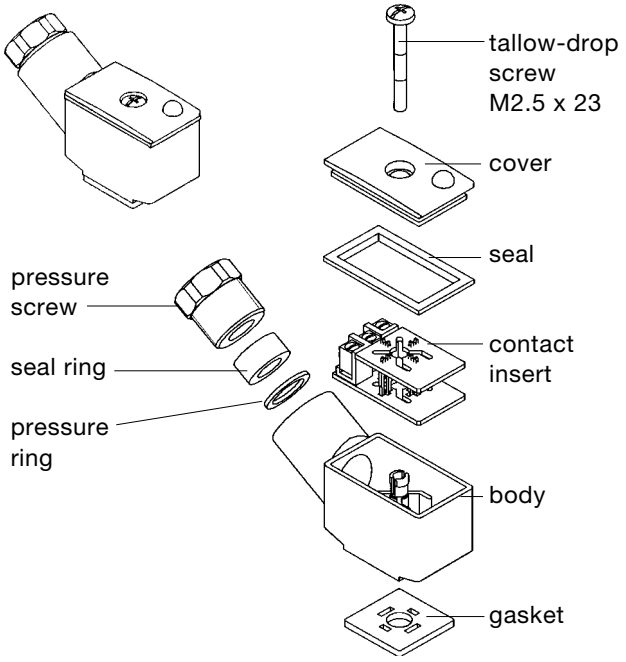

Ordering Chart for Accessories

Device/ Accessory	Description	Item No.
Cable-plugs[1] Type 2506	Standard cable plug, 0–250 V AC/DC (standard-delivery)[1]	008 353 P
	with LED, 12–24 V AC/DC	008 402 A
	with LED, 100-120 V AC/DC	008 403 B
	with LED, 200-240 V AC/DC	008 404 C
	with LED + varistor, 12–24 V AC/DC	008 408 Q
	with LED + varistor, 100–120 V AC/DC	008 409 R
	with LED + varistor, 200–240 V AC/DC	008 410 D
	(optional wirings and connection specifications see datasheet Type 2506)	

[1] **The standard cable plug (0-250 V AC/DC), Order-No. 008 353 P is part of the standard delivery.**
Order optional cable plugs using separate Item Number as shown.

Consult Type 2506 datasheet for the complete selection of the available plug configurations.