Ultrasonic Sensors

BUS M30M1-PPX-60/600-S92K
Order Code: BUS0045

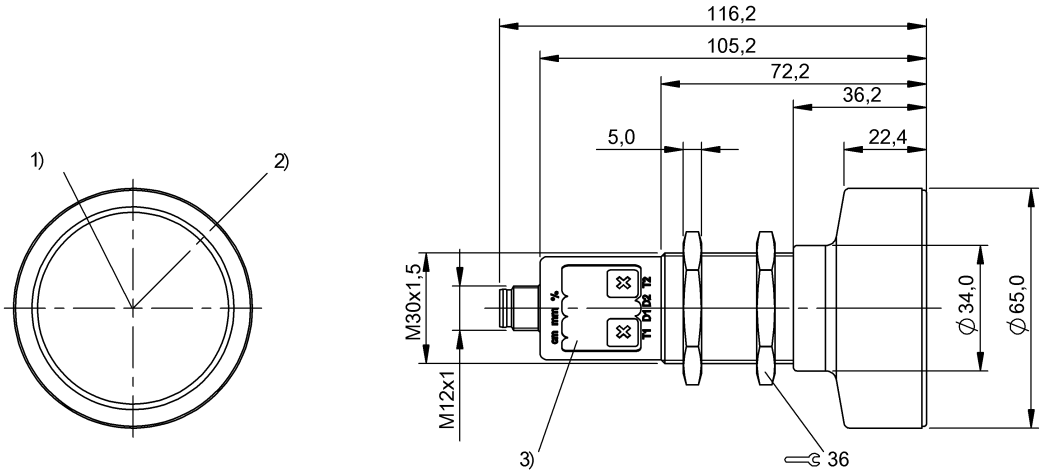

1) Ultrasonic transducer axis, 2) Exit direction 90° connector, 3) Display and control panel

IND. CONT. EQ
5HP6
for use in the secondary of
a class 2 source of supply

Basic features

Application	Object detection
Approval/Conformity	cULus LISTED CE EAC WEEE
Operating mode	Retro-reflector Reflectionlight scanner (switching point) Refl.light scanner (window)
Series	M30M1

Display/Operation

Adjuster	Key (2x)
Setting	Multiplex speed Synchronization on/off Synchronous/Multiplex mode Segment displ. bright/dark/off Filter strength (10 levels) Response delay 0 to 20 s Foreground suppression range Multiplex sensor address Sensor calibration Temperature comp. on/off Measured value filter Hysteresis Detection range (3 levels) Teach-in mode display/button Factory setting (Reset) Key disable on/off Operating mode Switching distance, 2 values Normally open/Normally closed

Electrical connection

Connection	M12x1-Male, 5-pin
Polarity reversal protected	yes
Short-circuit protection	yes

Electrical data

Current draw max.	80 mA
Hysteresis H max.	100 mm
Input function	Synchronization signal
Operating voltage Ub	9...30 VDC
Output current max.	200 mA
Rated operating voltage Ue DC	24 V
Switching frequency	3 Hz
Synchronization	internal, max. 10 sensors
Ultrasonic Frequency	80 kHz

Environmental conditions

Ambient temperature	-25...70 °C
Protection degree	IP67
Storage temperature	-40...85 °C

Functional safety

MTTF (40 °C)	1483 a

Material

Housing material	Brass PBT, TPU
Material sensing surface	PU foam/Epoxy resin/Glass
Surface protection	nickel plated

BUS M30M1-PPX-60/600-S92K
Order Code: BUS0045

Mechanical data

Dimension	Ø 65 x 116.2 mm
Mounting	Nut M30x1.5

Output/Interface

Switching output	PNP normally open/normally closed (NO/NC)

Range/Distance

Range	600...8000 mm
Rated operating distance Sn	6000 mm
Repeat accuracy	± 0.15 %FS
Resolution	≤ 0.180 mm

Remarks

The sensor is functional again after the overload has been eliminated.
Reference object for Sn: tube ø27mm. Max. range refers to the aligned plate.
Do not press key using a pointed tool.
Order accessories separately.
For additional information, refer to user's guide.
For more information about MTTF and B10d see MTTF / B10d Certificate

Indication of the MTTF- / B10d value does not represent a binding composition and/or life expectancy assurance; these are simply experiential values with no warranty implications. These declared values also do not extend the expiration period for defect claims or affect it in any way.

Connector Drawings

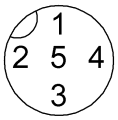

Wiring Diagrams

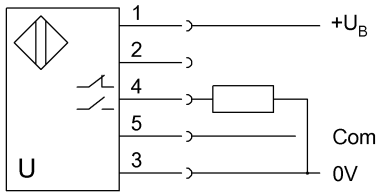

BUS M30M1-PPX-60/600-S92K
Order Code: BUS0045

Technical Drawings

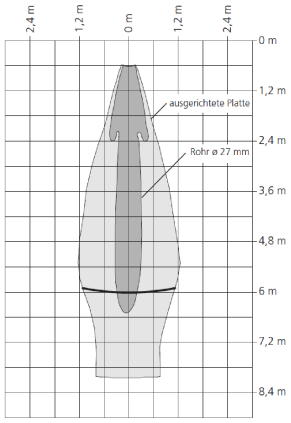

Help Views

