SCHAEFFLER



FAG

UCFC206-J7

Flanged housing unit

Schaeffler ID:
0821988370000

Flanged housing unit UCFC

Technical information

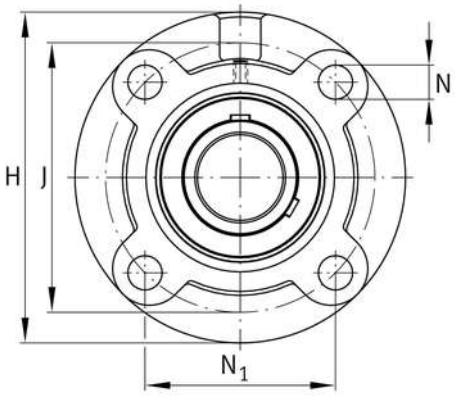

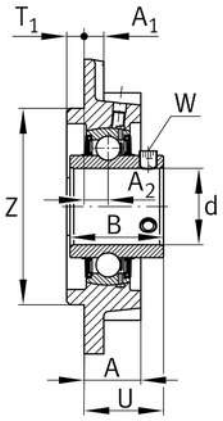

Main Dimensions & Performance Data

d	30 mm	Bore diameter
H	125 mm	Height flange
U	32,2 mm	Total height unit
C_r	19.500 N	Basic dynamic load rating, radial
C_{0r}	11.300 N	Basic static load rating, radial
C_{ur}	480 N	Fatigue load limit, radial
	1,253 kg	Weight

Mounting dimensions

J	100 mm	Distance fixing bore
J	100 mm	Pitch circle diameter (holes)
N	12 mm	Fixing bore
N_1	70,7 mm	Distance fixing bore
T_1	8 mm	Height spigot
Z	80 mm	Diameter spigot
	h8	Diameter spigot clearance
n	4	Number of screwing holes

Dimensions

A_1	8 mm	Thickness of flange
A_2	10 mm	Distance raceway
B	38,1 mm	Width
Q	M6	Connection thread lubrication

Additional information

	UC206	Bearing designation

The datasheet is only an overview of dimensions and basic load ratings of the selected product. Please always observe all further information and guidelines for this product. For further information you can use the contact form on our website.