O8H219

Diffuse reflection sensor with background suppression

O8H-HNKG/2,0M

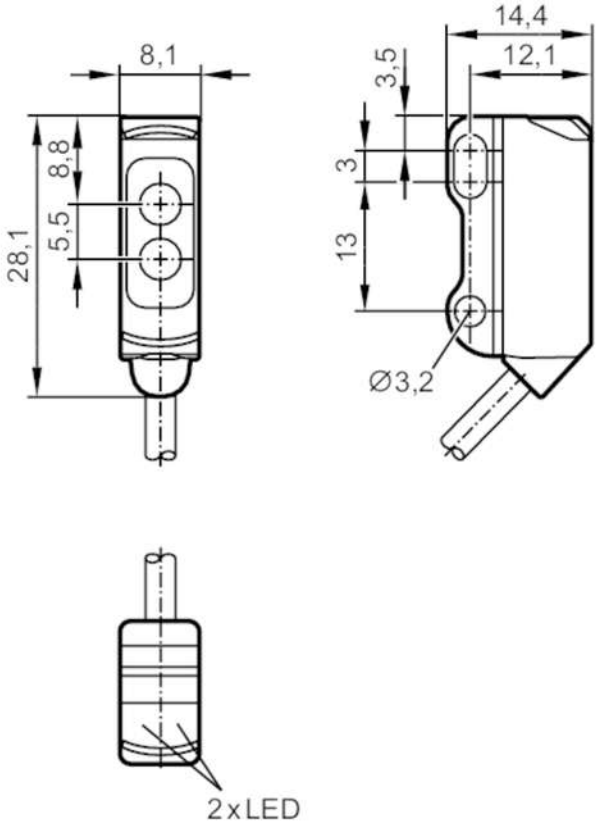

receiver in upper lens
transmitter in lower lens

Product characteristics		
Type of light		red light
Housing		rectangular
Application		
Special feature		Background suppression
Function principle		Diffuse reflection sensor
Electrical data		
Operating voltage	[V]	10...30 DC
Current consumption	[mA]	20; ((24 V))
Protection class		III
Reverse polarity protection		yes
Type of light		red light
Wave length	[nm]	633
Outputs		
Electrical design		NPN
Output function		light-on mode
Max. voltage drop switching output DC	[V]	2.5

O8H219

Diffuse reflection sensor with background suppression

O8H-HNKG/2,0M

Permanent current rating of switching output DC	[mA]	100	
Switching frequency DC	[Hz]	1000	
Short-circuit protection		yes	
Type of short-circuit protection		pulsed	
Detection zone			
Range	[mm]	1...80; (white paper 200 x 200 mm)	
Range on white object (90 % remission)	[mm]	1...80	
Range on grey object (18 % remission)	[mm]	3...76	
Range on black object (6 % remission)	[mm]	5...74	
Range adjustable		no	
Max. light spot diameter	[mm]	4	
Light spot dimensions refer to		at maximum range	
Background suppression available		yes	
Operating conditions			
Ambient temperature	[°C]	-25...60	
Protection		IP 65; IP 67	
Tests / approvals			
EMC		EN 60947-5-2	
MTTF	[years]	757	
UL approval		Ta	-25...60 °C
		Enclosure type	Type 1
		power supply	Limited Voltage/Current
		UL Approval no.	E014
		File number UL	E174191
Mechanical data			
Weight	[g]	38	
Housing		rectangular	
Dimensions	[mm]	28.1 x 8.1 x 14.4	
Materials		housing: ABS; stainless steel (316L/1.4404)	
Lens material		PMMA	
Lens alignment		side lens	
Displays / operating elements			
Display		switching status	1 x LED, yellow
		operation	1 x LED, green
Remarks			
Pack quantity		1 pcs.	

O8H219

Diffuse reflection sensor with background suppression

O8H-HNKG/2,0M

Electrical connection

Cable: 2 m, PVC; 3 x 0.08 mm²

Connection

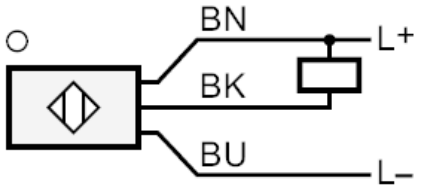

	Core colours :
BN =	brown
BK =	black
BU =	blue

Diagrams and graphs

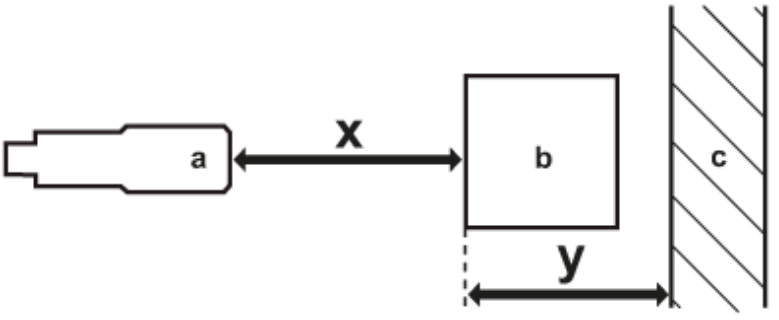

a: sensor
b: object
c: background
x: distance sensor/object [mm]
y: min. distance object/background [mm]

O8H219

Diffuse reflection sensor with background suppression

O8H-HNKG/2,0M

accuracy graph

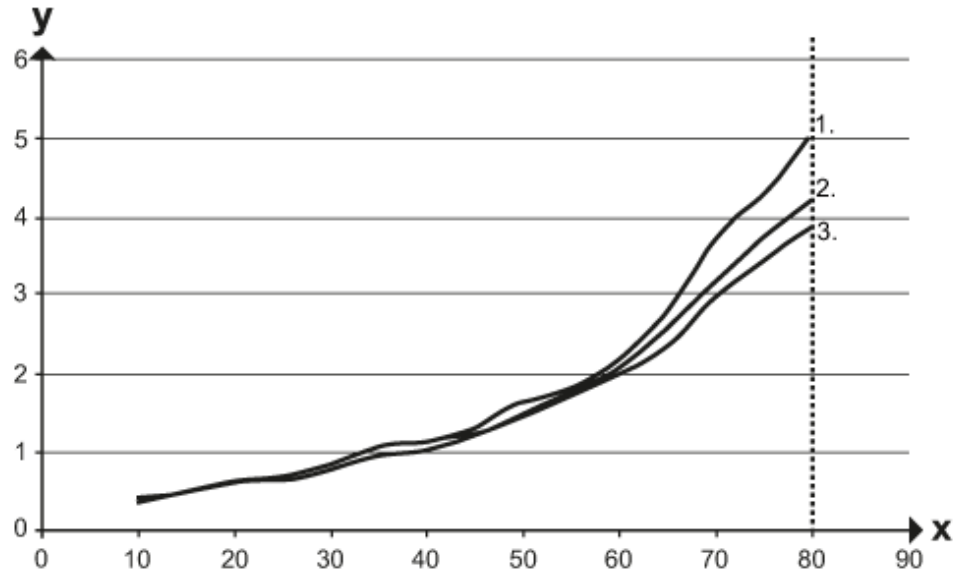

x: distance sensor/object [mm]

y: min. distance object/background [mm]

1 = object black (6 % remission) , background white (90 % remission)

2 = object grey (18 % remission) , background white (90 % remission)

3 = object white (90 % remission) , background white (90 % remission)