Data sheet

Insulation monitoring relay CM-IWS.1

For unearthed AC, DC and mixed AC/DC systems up to U_n = 250 V AC and 300 V DC

The CM-IWS.1 serves to monitor insulation resistance in accordance with IEC 61557-8 in unearthed IT AC systems, IT AC systems with galvanically connected DC circuits, or unearthed IT DC systems with a voltage up to 250 V AC and 300 V DC. It can be configured to the requirements of the applications and therefore used multi-functional.

All devices are available with two different terminal versions. You can choose between the proven screw connection technology (double-chamber cage connection terminals) and the completely tool-free Easy Connect Technology (push-in terminals).



2CDC 251 009 V0012

Characteristics

- For monitoring the insulation resistance of unearthed IT systems up to U_n = 250 V AC and 300 V DC
- According to IEC/EN 61557-8 “Electrical safety in low voltage distribution systems up to 1000 V a.c. and 1500 V d.c. – Equipment for testing, measuring or monitoring of protective measures – Part 8: Insulation monitoring devices for IT systems"
- Rated control supply voltage 24-240 V AC/DC
- Prognostic measuring principle with superimposed square wave signal
- One measuring range 1-100 kΩ
- Precise adjustment of the threshold value in 1 kΩ steps
- Interrupted wire detection
- Fault storage / latching configurable by control input
- Precise adjustment by front-face operating controls
- Screw connection technology or Easy Connect Technology available
- Housing material for highest fire protection classification UL 94 V-0
- Tool-free mounting on DIN rail as well as demounting
- 1 c/o (SPDT) contact, closed-circuit principle
- 22.5 mm (0.89 in) width
- 3 LEDs for the indication of operational states

Approvals

- UL 508, CAN/CSA C22.2 No.14
- GL
- IEC/EN 60947-5-1, CB scheme
- GB14048.5 - 2001, CCC
- GOST
- RMRS

Marks

- CE
- C-Tick

Power and productivity for a better world™

Order data

Insulation monitoring relay

Type	Nominal voltage U_n of the distribution system to be monitored	Rated control supply voltage	Connection technology	Order code
CM-IWS.1P	0-250 V AC / 0-300 V DC	24-240 V AC/DC	Push-in terminals	1SVR 740 660 R0100
CM-IWS.1S			Screw type terminals	1SVR 730 660 R0100

Accessories

Type	Description	Order code
ADP.01	Adapter for screw mounting	1SVR 430 029 R0100
MAR.01	Marker label for devices without DIP switches	1SVR 366 017 R0100
COV.11	Sealable transparent cover	1SVR 730 005 R0100

Connection technology

Maintenance free Easy Connect Technology with push-in terminals

Type designation CM-xxS.yyP

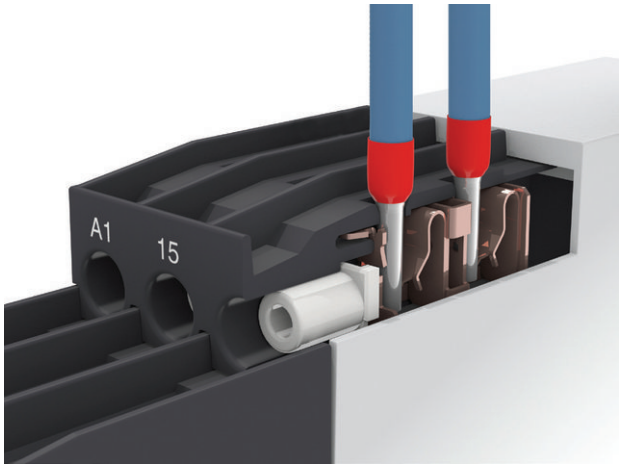

2CDC 253 026 F0011

Push-in terminals

- Tool-free connection of rigid and flexible wires with wire end ferrule according to DIN 46228-1-A, DIN 46228-4-E
  Wire size: 2 x 0.5-1.5 mm², (2 x 20 - 16 AWG)
- Easy connection of flexible wires without wire end ferrule by opening the terminals
- No retightening necessary
- One operation lever for opening both connection terminals
- For triggering the lever and disconnecting of wires you can use the same tool (Screwdriver according to DIN ISO 2380-1 Form A 0.8 x 4 mm (0.0315 x 0.157 in), DIN ISO 8764-1 PZ1 ø 4.5 mm (0.177 in))
- Constant spring force on terminal point independent of the applied wire type, wire size or ambient conditions (e. g. vibrations or temperature changes)
- Opening for testing the electrical contacting
- Gas-tight

Approved screw connection technology with double-chamber cage connection terminals

Type designation CM-xxS.yyS

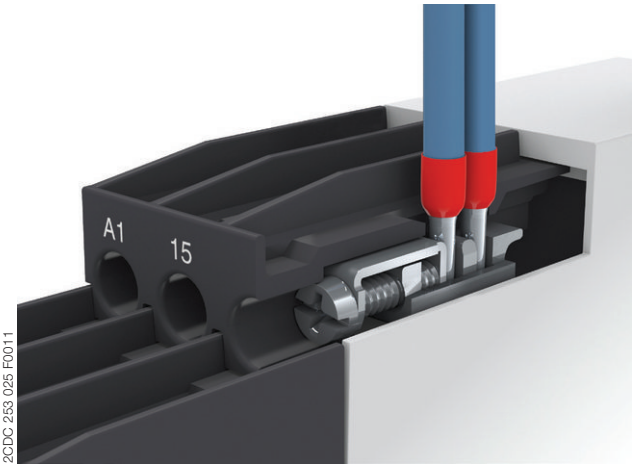

2CDC 253 025 F0011

Double-chamber cage connection terminals

- Terminal spaces for different wire sizes:
  fine-strand with/without wire end ferrule:
  1 x 0.5-2.5 mm² (2 x 20 - 14 AWG),
  2 x 0.5-1.5 mm² (2 x 20 - 16 AWG)
  rigid:
  1 x 0.5-4 mm² (1 x 20 - 12 AWG),
  2 x 0.5-2.5 mm² (2 x 20 - 14 AWG)
- One screw for opening and closing of both cages
- Pozidrive screws for pan- or crosshead screwdrivers according to DIN ISO 2380-1 Form A 0.8 x 4 mm (0.0315 x 0.157 in), DIN ISO 8764-1 PZ1 ø 4.5 mm (0.177 in)

Both the Easy Connect Technology with push-in terminals and screw connection technology with double-chamber cage connection terminals have the same connection geometry as well as terminal position.

Functions

Operating controls

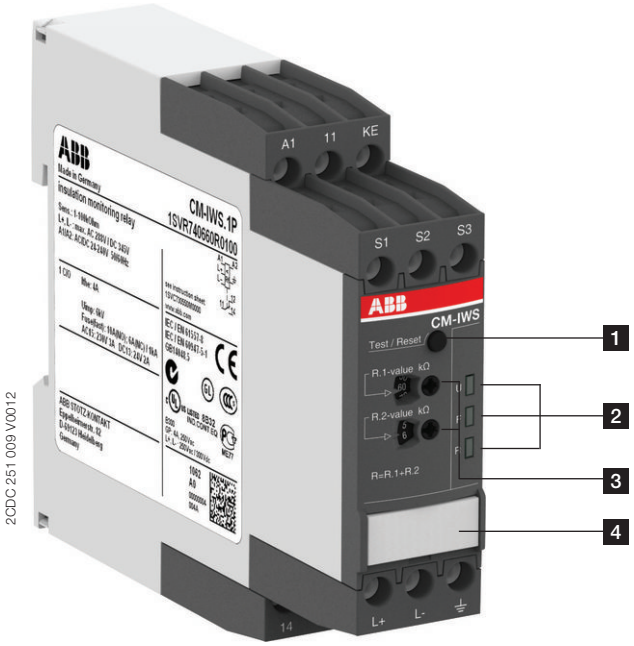

2CDC 251 009 V0012

1 **Test and reset button**

2 **Indication of operational states**

U: green LED - control supply voltage

F: red LED - fault message

R: yellow LED - relay status

3 **Configuration and setting**

Front-face rotary switches for threshold value adjustment:

R.1 for R1 tens figures:

0, 10, 20, 30, 40, 50, 60, 70, 80, 90 kΩ in ten kΩ steps

R.2 for R1 units figures:

1, 2, 3, 4, 5, 6, 7, 8, 9, 10 kΩ in one kΩ steps

4 **Marker label for devices without DIP switches**

Application / monitoring function

The CM-IWS.1 serves to monitor insulation resistance in accordance with IEC 61557-8 in unearthed IT AC systems, IT AC systems with galvanically connected DC circuits, or IT DC systems.

The insulation resistance between system lines and system earth is measured. If this falls below the adjustable threshold values, the output relay de-energizes.

The device can monitor control circuits (single-phase) and main circuits (3-phase).

Supply systems with voltages U_n = 0-250 V AC (15-400 Hz) or 0-300 V DC can be directly connected to the measuring inputs and their insulation resistance being monitored. For systems with voltages above 250 V AC and 300 V DC the insulation monitoring relay CM-IWN.x with or without the coupling unit CM-IVN can be used.

Measuring principle

A pulsating measuring signal is fed into the system to be monitored and the insulation resistance calculated.

This pulsating measuring signal alters its form depending on the insulation resistance and system leakage capacitance. From this altered form the change in the insulation resistance is forecast.

When the forecast insulation resistance corresponds to the insulation resistance calculated in the next measurement cycle and is smaller than the set threshold value, the output relay de-energizes. This measuring principle is also suitable for the detection of symmetrical insulation faults.

Additional monitoring functions

The CM-IWS.1 cyclically monitors the measuring circuit connections ⏚ and KE for wire interruption. In case of a wire interruption in one of the connections, the output relay de-engergizes.

In addition, the unearthed AC-, DC- or AC/DC system is monitored for inadmissible system leakage capacitance. If the system leakage capacitance is too high, the output relay de-energizes.

Operating mode

The system to be monitored is connected to terminals L+ and L-. The earth potential is connected to terminals ⏚ and KE.

The device operates according to the closed-circuit principle (fault state: relay de-energized).

Once the control supply voltage has been applied the insulation monitoring relay runs through a system test routine. The system is diagnosed and the settings are tested. If no internal or external faults are found after this test routine is completed, the output relay energizes.

If the measured value drops below the set threshold value, the output relay de-energizes. If the measured value exceeds the threshold value plus hysteresis, the output relay re-energizes.

All operating states are signalled by the front-face LEDs. See table "LEDs, status information and fault messages" on page 8.

Test function

The test function is only possible when there is no fault.

By pressing the front-face combined test/reset button a system test routine is executed. The output relay remains de-energized as long as the test/reset button is pressed, the control contact S1-S3 is closed or the test functions are processed.

The test function can be activated either with the front-face combined test/reset button or with a remote test button connected as shown in the picture.



Fault storage, reset function and remote reset

The output relay remains de-energized and only energizes after the combined test/reset button is pressed or after the remote reset (terminals S2-S3) is activated, and when the insulation resistance is higher than the set threshold value plus hysteresis.

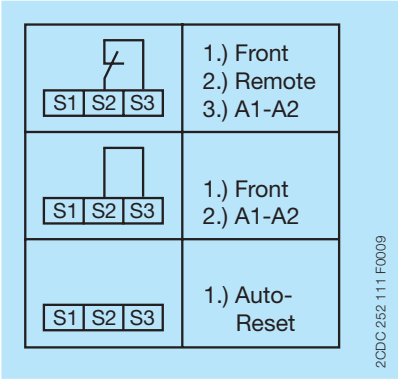

Function descriptions/diagrams

Control supply voltage not applied / Output contact open / LED OFF

Control supply voltage applied / Output contact closed / LED ON

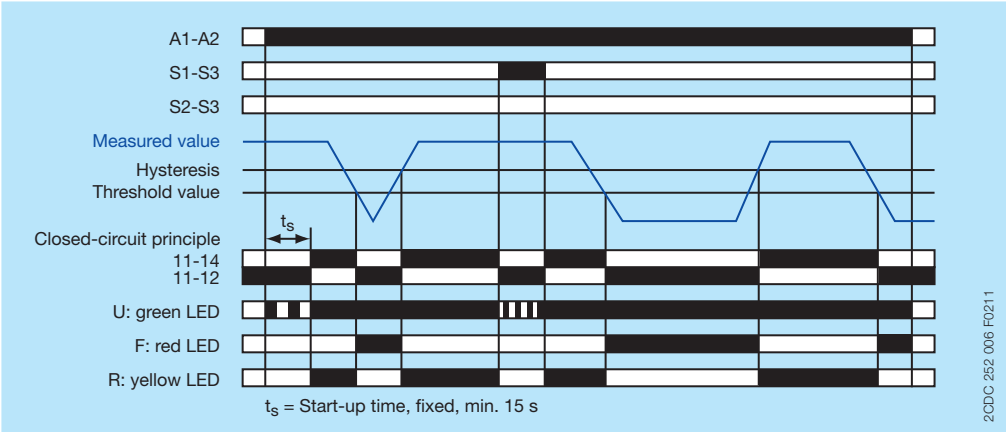

Insulation resistance monitoring w/o fault storage, auto reset

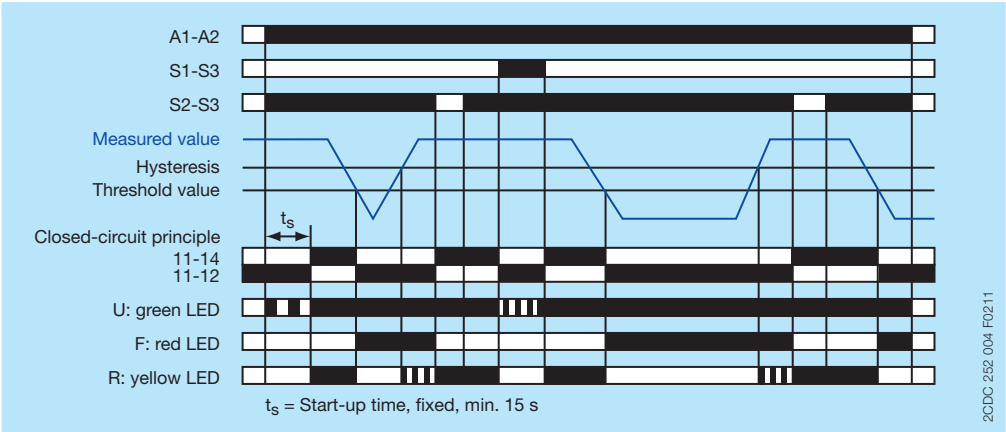

Insulation resistance monitoring with fault storage, manual reset

Connection and wiring

Connection diagram

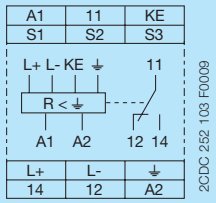

A1-A2	Control supply voltage
S1-S3	Remote test
S2-S3	Remote reset
L+, L–	Measuring circuit/input, system connection
⏚, KE	Measuring circuit/input, earth connections
11-12/14	Output relay, closed-circuit principle

Wiring diagrams

Always connect L+ and L- to different conductors. L+ and L- can be connected to any of the conductors.

U_n ≤ 250 V AC; 300 V DC

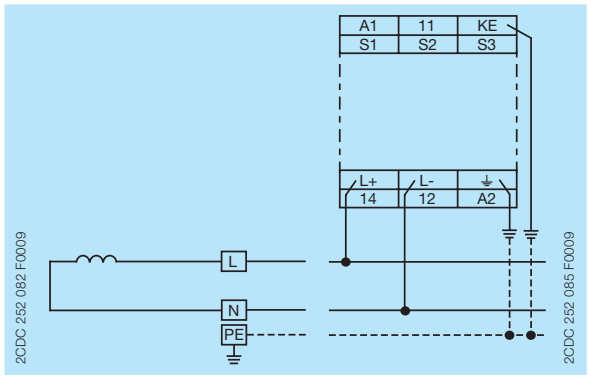

2-wire AC system

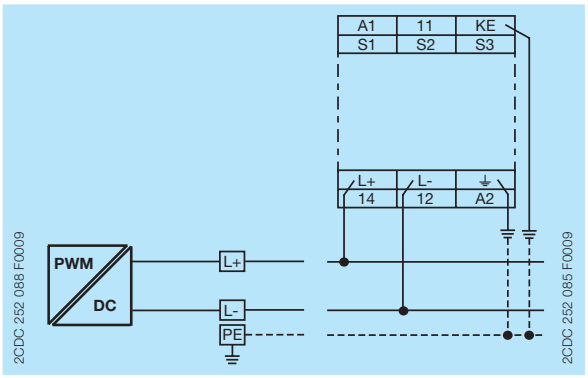

2-wire DC system

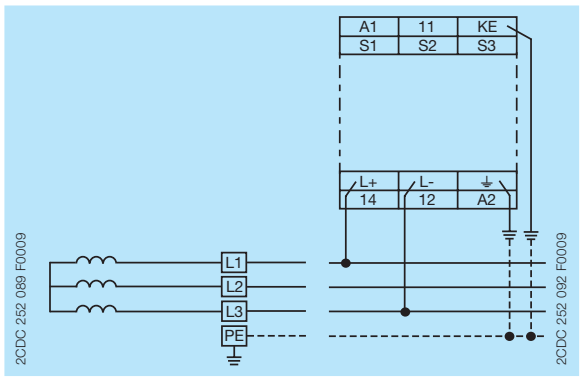

3-wire AC system

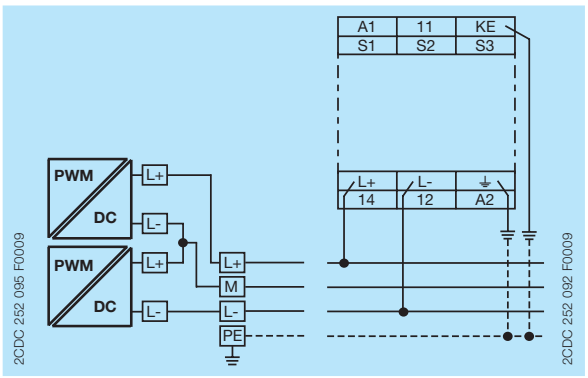

3-wire DC system

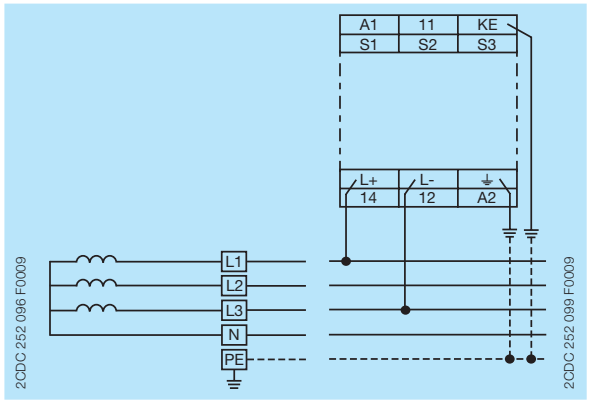

4-wire AC system

Configuration and settings

Rotary switches R.1 and R.2 (treshold value)

By means of two separate 10 position rotary switches with direct reading scales, the threshold value for the insulation resistance R_F of the systems to be monitored can be adjusted.

With the R.1 rotary switch the tens figure is set and with the R.2 rotary switch the units figure is set. The set threshold value is then the addition of the two values. For example, R1.1 set to 70 and R1.2 set to 8 leads to a threshold value for R1 of 78 kΩ.

Indication of operational states

LEDs, status information and fault messages

Operational state	LED U (green)	LED F (red)	LED R (yellow)
Start-up		OFF	OFF
No fault		OFF	
Insulation fault (below threshold value)			OFF
KE/⏚ wire interruption			OFF
System leakage capacitance too high / invalid measurement result			OFF
Internal system fault	OFF		OFF
Test function		OFF	OFF
No fault after fault storage[1]		[2]	

[1] The device has triggered after an insulation fault. The fault has been stored and the insulation resistance has returned to a higher value than the threshold value plus hysteresis.
[2] Depending on the fault.

Application examples

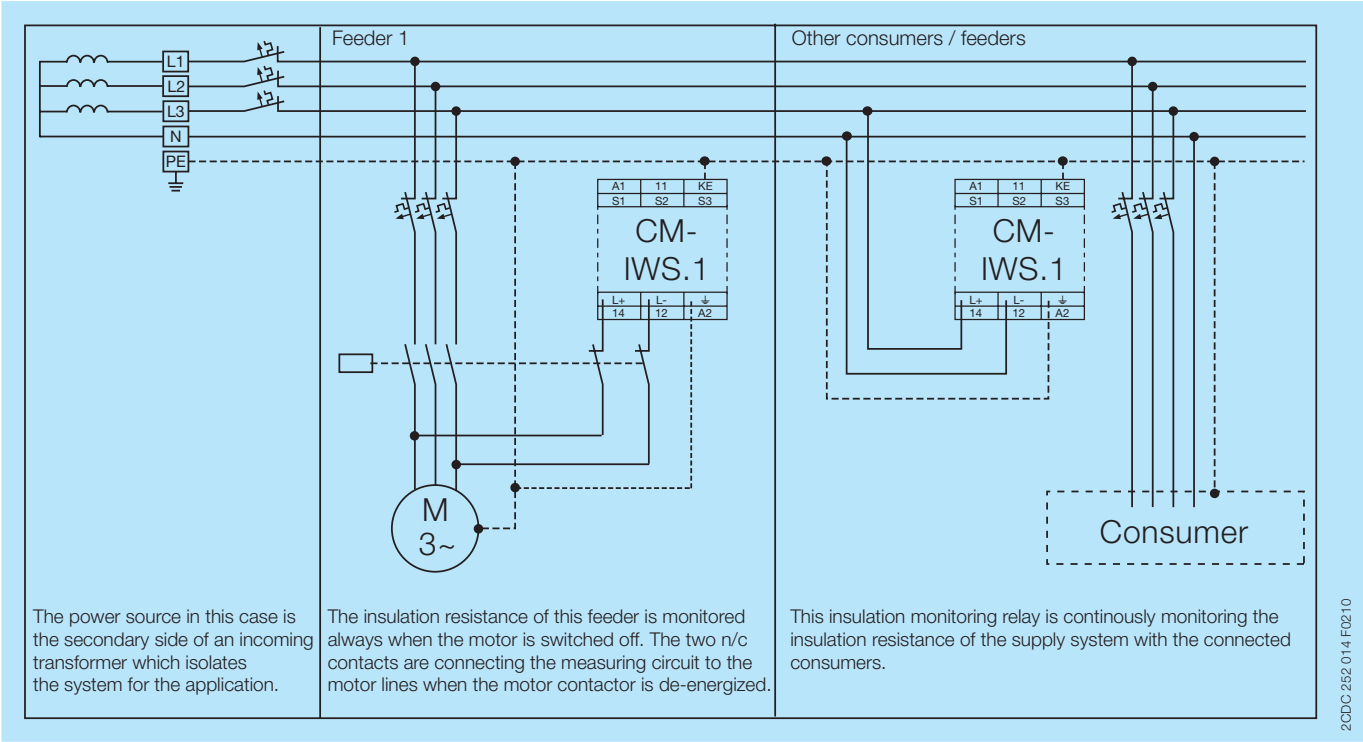

Earth fault / insulation resistance monitoring of different feeder circuits with fault localization

Technical data

Data at T_a = 25 °C and rated values, unless otherwise indicated

Input circuits

Input circuit - Supply circuit		A1 - A2
Rated control supply voltage U_s		24-240 V AC/DC
Rated control supply voltage tolerance		-15...+10 %
Typical current / power consumption	24 V DC	35 mA / 0.9 VA
	115 V AC	17 mA / 2.0 VA
	230 V AC	14 mA / 3.2 VA
Rated frequency f_s		DC or 15-400 Hz
Frequency range AC		13.5-440 Hz
Power failure buffering time	min.	20 ms
Start-up time t_s, fixed	min.	15 s

Input circuit - Measuring circuit		L+, L-, ⏚, KE
Monitoring function		insulation resistance monitoring of IT systems (IEC/EN 61557-8)
Measuring principle		prognostic measuring principle with superimposed square wave signal
Nominal voltage U_n of the distribution system to be monitored		0-250 V AC / 0-300 V DC
Voltage range of the distribution system to be monitored		0-287.5 V AC / 0-345 V DC (tolerance +15 %)
Rated frequency f_N of the distribution system to be monitored		DC or 15-400 Hz
Tolerance of the rated frequency f_N		13.5-440 Hz
System leakage capacitance C_e	max.	10 µF
Extraneous DC voltage U_{fg} (when connected to an AC system)	max.	290 V DC
Number of possible response / threshold values		1
Adjustment range of the specified response value R_{an} (threshold)	min.-max.	1-100 kΩ
Adjustment resolution		1 kΩ
Tolerance of the adjusted threshold value / Relative percentage uncertainty A at -5...+45 °C, U_n = 0-115 %, U_s = 85-110 %, f_N, f_s, C_e = 1µF	at 1-10 kΩ R_F	±0.5 kΩ
	at 10-100 kΩ R_F	±6 %
Hysteresis related to the threshold value		25 %; min. 2 kΩ
Internal impedance Z_i	at 50 Hz	100 kΩ
Internal DC resistance R_i		115 kΩ
Measuring voltage U_m		22 V
Tolerance of measuring voltage U_m		+10 %
Measuring current I_m	max.	0.3 mA
Response time t_{an}		
pure AC system	0.5 x R_{an} and C_e = 1 µF	max. 10 s
DC system or AC system with connected rectifiers		max. 15 s
Repeat accuracy (constant parameters)		< 0.1 % of full scale
Accuracy of R_a (measured value) within the rated control supply voltage tolerance		< 0.05 % of full scale
Accuracy of R_a (measured value) within the operation temperature range	at 1-10 kΩ R_F	5 Ω / K
	at 10-100 kΩ R_F	0.05 % / K
Transient overvoltage protection (⏚ - terminal)		avalanche diode

Input circuit - Control circuits		S1 - S2 - S3
Control inputs - volt free	S1-S3	remote test
	S2-S3	remote reset
Maximum switching current in the control circuit		1 mA
Maximum cable length to the control inputs		50 m - 100 pF/m (164 ft - 30.5 pF/ft)
Minimum control pulse length		150 ms
No-load voltage at the control input		≤ 24 V DC

User interface

Indication of operational states		
Control supply voltage	U	green LED
Fault message	F	red LED
Relay status	R	yellow LED

Details see table "LEDs, status information and fault messages" on page 8 and "Function descriptions/diagrams" on page 6.

Operating elements and controls		
Adjustment of threshold value R_{an}	R.1	rotary switch, 10 kΩ steps for the tens figure
	R.2	rotary switch, 1 kΩ steps for the units figure

Output circuits

Kind of output			relay, 1 c/o (SPDT) contact
Operating principle			closed-circuit principle[1)]
Contact material			AgNi alloy, Cd free
Rated operational voltage (IEC/EN 60947-1)			250 V AC / 300 V DC
Min. switching voltage / Min. switching current			24 V / 10 mA
Max. switching voltage / Max. switching current			see "Load limits curves" on page 13
Rated operational current I_e (IEC/EN 60947-5-1)		AC12 (resistive) at 230 V	4 A
		AC15 (inductive) at 230 V	3 A
		DC12 (resistive) at 24 V	4 A
		DC13 (inductive) at 24 V	2 A
AC rating (UL 508)	Utilization category (Control Circuit Rating Code)		B 300, pilot duty general purpose (250 V, 4 A, cos φ 0.75)
	max. rated operational voltage		250 V AC
	max. continuous thermal current at B 300		4 A
	max. making/breaking apparent power at B 300		3600/360 VA
Mechanical lifetime			30 x 10^6 switching cycles
Electrical lifetime		AC12, 230 V, 4 A	0.1 x 10^6 switching cycles
Max. fuse rating to achieve short-circuit protection		n/c contact	6 A fast-acting
		n/o contact	10 A fast-acting
Conventional thermal current I_{th} (IEC/EN 60947-1)			4 A

[1)] Closed-circuit principle: Output relay(s) de-energize(s) if measured value falls below the adjusted threshold value R_{an}

General data

MTBF		on request	
Duty time		100 %	
Dimensions (W x H x D)	product dimensions	22.5 x 85.6 x 103.7 mm (0.89 x 3.37 x 4.08 in)	
	packaging dimensions	97 x 109 x 30 mm (3.82 x 4.29 x 1.18 in)	
Weight		**Screw connection technology**	**Easy Connect Technology (push-in)**
	net weight	0.148 kg (0.326 lb)	0.137 kg (0.302 lb)
	gross weight	0.173 kg (0.382 lb)	0.162 kg (0.357 lb)
Mounting		DIN rail (IEC/EN 60715), snap-on mounting without any tool	
Mounting position		any	
Minimum distance to other units		not necessary	
Material of housing		UL 94 V-0	
Degree of protection	housing	IP50	
	terminals	IP20	

Electrical connection

		Screw connection technology	**Easy Connect Technology (Push-in)**
Wire size	fine-strand with(out) wire end ferrule	1 x 0.5-2.5 mm² (1 x 20-14 AWG) 2 x 0.5-1.5 mm² (2 x 20-16 AWG)	2 x 0.5-1.5 mm² (2 x 20-16 AWG)
	rigid	1 x 0.5-4 mm² (1 x 20-12 AWG) 2 x 0.5-2.5 mm² (2 x 20-14 AWG)	2 x 0.5-1.5 mm² (2 x 20-16 AWG)
Stripping length		8 mm (0.32 in)	
Tightening torque		0.6 - 0.8 Nm (5.31 - 7.08 lb.in)	-

Environmental data

Ambient temperature ranges	operation	-25...+60 °C
	storage	-40...+85 °C
	transport	-40...+85 °C
Climatic category	IEC/EN 60721-3-3	3K5 (no condensation, no ice formation)
Damp heat, cyclic	IEC/EN 60068-2-30	6 x 24 h cycle, 55 °C, 95 % RH
Vibration, sinusoidal	IEC/EN 60255-21-1	Class 2
Shock, half-sine	IEC/EN 60255-21-2	Class 2

Isolation data

Rated impulse withstand voltage U_{imp} (IEC/EN 60947-1, IEC/EN 60664-1)	supply circuit / measuring circuit	6 kV
	supply circuit / output circuit	6 kV
	measuring circuit / output circuit	6 kV
Pollution degree (IEC/EN 60664-1)		3
Overvoltage category (IEC/EN 60664-1)		III
Rated insulation voltage U_i (IEC/EN 60947-1, IEC/EN 60664-1)	supply circuit / measuring circuit	300 V
	supply circuit / output circuit	300 V
	measuring circuit / output circuit	300 V
Basic insulation for rated control supply voltage (IEC/EN 60664-1)	supply circuit / measuring circuit	250 V AC / 300 V DC
	supply circuit / output circuit	250 V AC / 300 V DC
	measuring circuit / output circuit	250 V AC / 300 V DC
Protective separation (IEC/EN 61140, EN 50178)	supply circuit / output circuit	250 V AC / 250 V DC
	supply circuit / measuring circuit	250 V AC / 250 V DC
	measuring circuit / output circuit	250 V AC / 250 V DC
Test voltage, routine test (IEC/EN 60255-5, IEC/EN 61010-1)	supply circuit / output circuit	2.32 kV, 50 Hz, 2 s
	supply circuit / measuring circuit	2.32 kV, 50 Hz, 2 s
	measuring circuit / output circuit	2.2 kV, 50 Hz, 1 s

Standards

Product standard	IEC/EN 61557-8, IEC/EN 60255-6
Other standards	EN 50178
Low Voltage Directive	2006/95/EC
EMC Directive	2004/108/EC
RoHS Directive	2002/95/EC

Electromagnetic compatibility

Interference immunity to		IEC/EN 61000-6-1, IEC/EN 61000-6-2, IEC/EN 61326-2-4
electrostatic discharge	IEC/EN 61000-4-2	Level 3, 6 kV / 8 kV
radiated, radio-frequency, electromagnetic field	IEC/EN 61000-4-3	Level 3, 10 V/m (1 GHz) / 3 V/m (2 GHz) / 1 V/m (2.7 GHz)
electrical fast transient/burst	IEC/EN 61000-4-4	Level 3, 2 kV / 5 kHz
surge	IEC/EN 61000-4-5	Level 3, installation class 3, supply circuit and measuring circuit 1 kV L-L, 2 kV L-earth
conducted disturbances, induced by radio-frequency fields	IEC/EN 61000-4-6	Level 3, 10 V
voltage dips, short interruptions and voltage variations	IEC/EN 61000-4-11	Class 3
harmonics and interharmonics	IEC/EN 61000-4-13	Class 3
Interference emission		IEC/EN 61000-6-3, IEC/EN 61000-6-4
high-frequency radiated	IEC/CISPR 22, EN 55022	Class B
high-frequency conducted	IEC/CISPR 22, EN 55022	Class B

Technical diagrams

Load limits curves

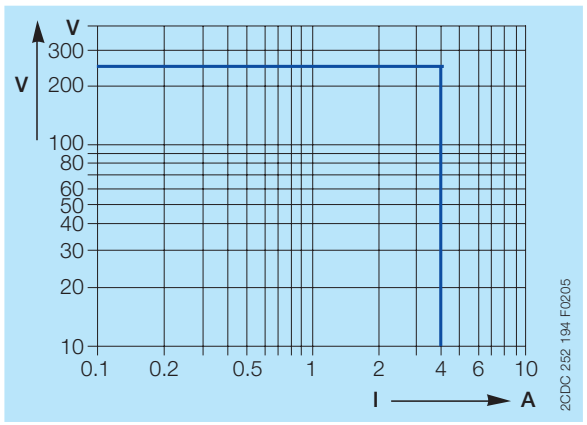

AC load (resistive)

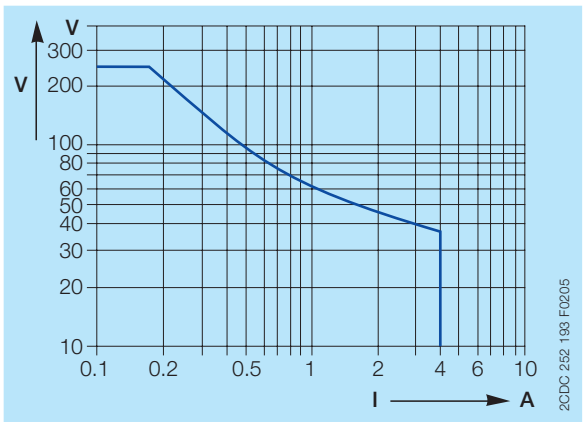

DC load (resistive)

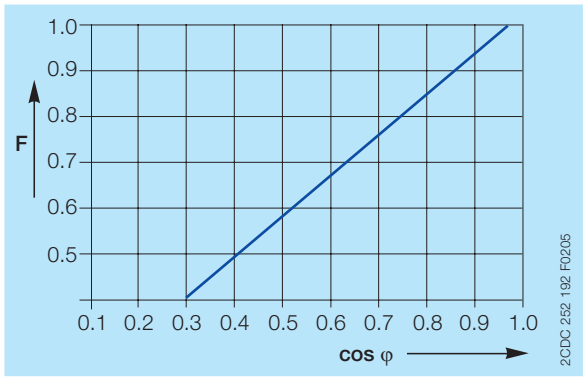

Derating factor F at inductive AC load

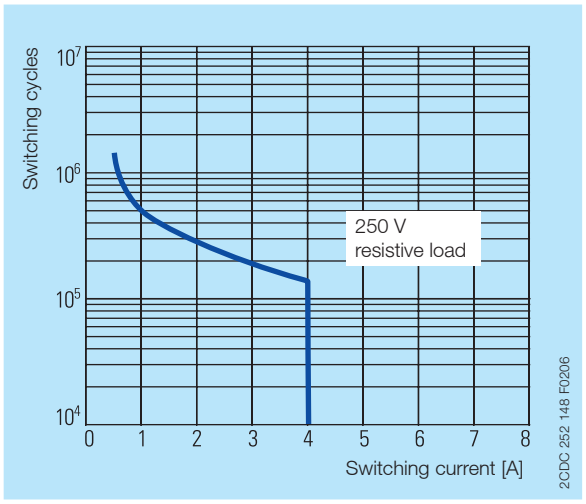

Contact lifetime

Dimensions

in **mm** and *inches*

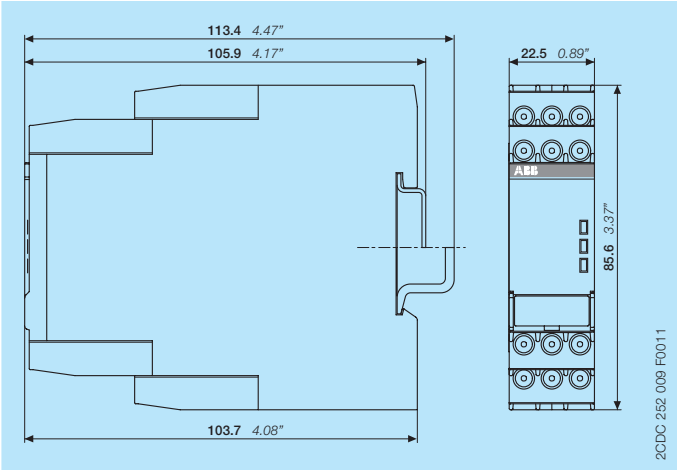

CM-IWS.1 - Insulation monitoring relay

Accessories

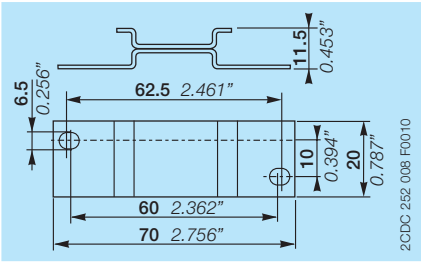

ADP.01 - Adapter for screw mounting

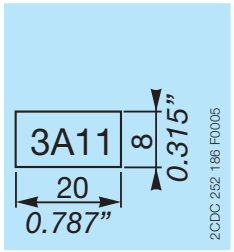

MAR.01 - Marker label for devices without DIP switches

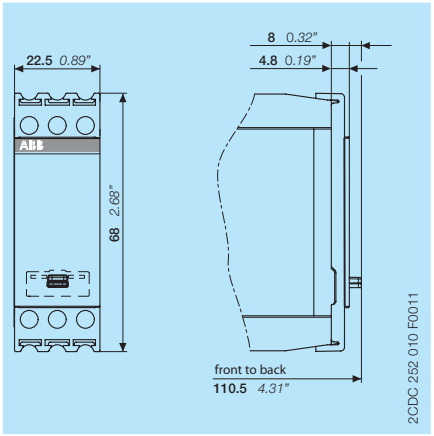

COV.11 - Sealable transparent cover

Further documentation

Document title	Document type	Document number
Electronic products and relays	Catalog	2CDC 110 004 C020x
CM-IWS.1, CM-IWS.2	Instruction sheet	1SVC 730 550 M0000

You can find the documentation on the internet at www.abb.com/lowvoltage -> Control Products -> Electronic Relays and Controls -> Insulation monitors.

Contact us

ABB STOTZ-KONTAKT GmbH
P. O. Box 10 16 80
69006 Heidelberg, Germany
Phone: +49 (0) 6221 7 01-0
Fax: +49 (0) 6221 7 01-13 25
E-mail: info.desto@de.abb.com

You can find the address of your
local sales organisation on the
ABB home page
http://www.abb.com/contacts
-> Low Voltage Products and Systems

Document number 2CDC 112 195 D0201 (08.2012)

Note:
We reserve the right to make technical changes or modify the contents of this document without prior notice. With regard to purchase orders, the agreed particulars shall prevail. ABB AG does not accept any responsibility whatsoever for potential errors or possible lack of information in this document.

We reserve all rights in this document and in the subject matter and illustrations contained therein. Any reproduction, disclosure to third parties or utilization of its contents – in whole or in parts – is forbidden without prior written consent of ABB AG.

Copyright© 2012 ABB
All rights reserved