GOSSEN METRAWATT

SC30, SC40-B/-C, SC50-E, SC50-L
Split-Core Current Transformers

3-349-780-03
3/8.21

- Compact, split-core current transformers for primary nominal current from 60 A … 1000 A and secondary nominal current of 1 A or 5 A.
- Very easy and time-saving installation thanks to split-core design.
- Particularly suited for retrofit purposes since the dismantling of primary leads is not necessary
- Allows for retrofitting without interrupting mains power supply
- Compact design allows for use in areas with restricted access and confined space
- Clearly audible click sound confirms proper installation. Additional safety is provided by UV proof cable ties.
- Accuracy class: 0.5, 1 or 3, depending on type


SC30


SC50-E


SC40


SC50-L

Application

Thanks to their compact design, the split-core current transformers are especially suited for use in areas of restricted access and confined space. The separable core makes it easier to install the transformers on cables or rails. The split-core current transformers are the right choice when an interruption of the electrical circuit is difficult or a measuring instrument has to be easily and quickly refitted. The safe installation of the primary lead in the current transformer is guaranteed by the mechanical design and is confirmed by a distinctly audible click sound. Two UV proof cable ties, which are part of the standard equipment, help to fix the transformer additionally.

Technical Characteristics

Ambient Conditions

Deployment	indoor
Ambient temperature	–10 °C ... + 55 °C
Storage temperature	–20 °C ... + 70 °C
Relative humidity	5% ... 85%, no condensation allowed
Pollution degree	2
Protection class	IP20

Only suited for insulated primary conductors

Conditions of Use

Standard	IEC 61869-2
Rated short-term thermal current (Ith)	60 x Ipr/1s
Rated continuous thermal current (Icth)	100%
Rated insulation level	0.72/3/- kV
Rated frequency	50/60 Hz
Material	UL94:V2
Class of insulation	min. A (105 °C)
Cable opening	SC30: for leads with a max. dia. of 18 mm SC40-B: for leads with a max. dia. of 18 mm SC40-C: for leads with a max. dia. of 28 mm SC50-E: for leads with a max. dia. of 42 mm SC50-L: for leads with a max. dia. 2x 42 mmf

Length and cross-section of secondary lead as a function of:

SC30:	…/1A:	L = 3 m	0.,5 mm²
SC40-B:	…/1A:	L = 3 m	0.5 mm²
	…/5A:	L = 0.5 m	1.5 mm²
SC40-C:	…/1A:	L = 3 m	0.5 mm²
	…/5A:	L = 0.5 m	1.5mm²
SC50-E	…/1A:	L = 5 m	0.5 mm²
	…/5A:	L = 3 m	1.5 mm²
SC50-L	…/1A:	L = 5 m	0,5 mm²
	…/5A:	L = 3 m	1,5 mm²

Weight	SC30: …/1A:	200 g
	SC40-B: …/1A:	360 g
	…/5A:	300 g
	SC40-C: …/1A:	310 g
	…/5A:	250 g
	SC50-E …/1A:	525 g
	…/5A:	650 g
	SC50-L …/1A:	725 g
	…/5A:	850 g

SC30, SC40-B/-C, SC50-E, SC50-L
Split-Core Current Transformers

Dimensions

SC30

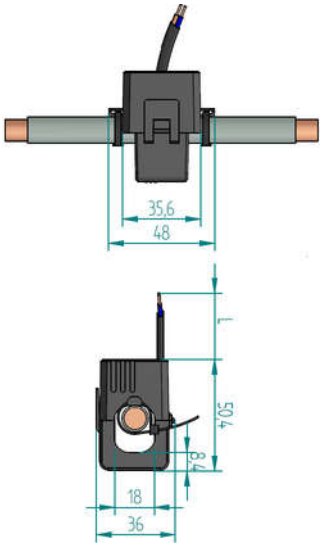

SC40-B

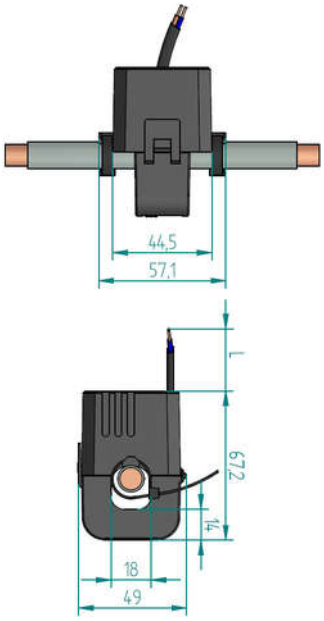

SC40-C

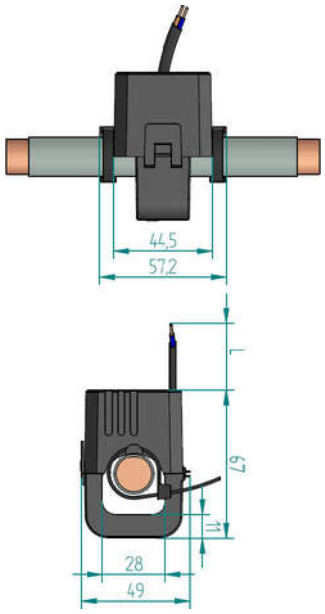

SC50-E

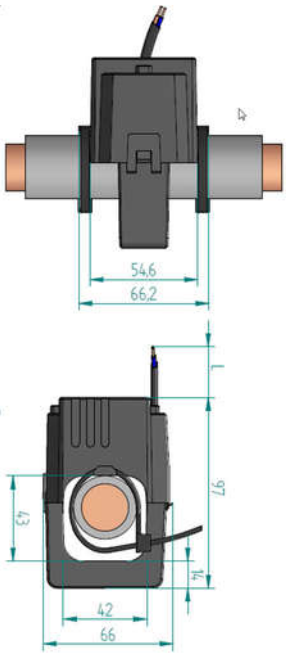

SC50-L

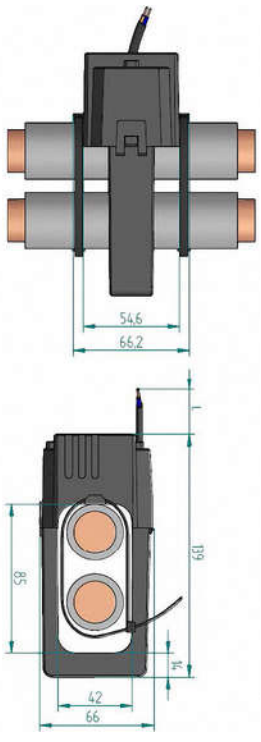

Wiring Diagram

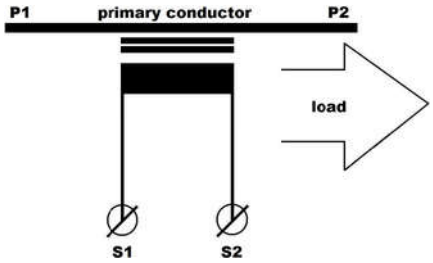

SC30, SC40-B/-C, SC50-E, SC50-L
Split-Core Current Transformers

Order Information

SC30 – Dia. 18 mm

Transmission factor	Class	Burden [1]	Secondary lead	Article number
60/1A	3	0.2 V/A	3 m, 0.5 mm²	U118A
75/1A	3	0.2 V/A	3 m, 0.5 mm²	U118B
100/1A	3	0.2 V/A	3 m, 0.5 mm²	U118C
125/1A	3	0.2 V/A	3 m, 0.5 mm²	U118D
150/1A	3	0.2 V/A	3 m, 0.5 mm²	U118E
200/1A	1	0.2 V/A	3 m, 0.5 mm²	U118F
250/1A	1	0.2 V/A	3 m, 0.5 mm²	U118G

[1] burden at the end of the secondary lead

SC40-B – Dia. 18 mm

Transmission factor	Class	Burden	Secondary lead	Article number
100/1A	1	0.2 V/A	3 m, 0.5 mm²	U118H
125/1A	1	0.2 V/A	3 m, 0.5 mm²	U118I
150/1A	1	0.2 V/A	3 m, 0.5 mm²	U118J
200/1A	0.5	0.2 V/A	3 m, 0.5 mm²	U118K
250/1A	0.5	0.2 V/A	3 m, 0.5 mm²	U118L
150/5A	1	1 V/A	0.5 m, 1,5 mm²	U518A
200/5A	1	1 V/A	0.5 m, 1,5 mm²	U518B
250/5A	0.5	1 V/A	0.5 m, 1,5 mm²	U518C

SC40-C – Ø 28 mm

Transmission factor	Class	Burden	Secondary lead	Article number
200/1A	1	0.2 V/A	3 m, 0.5 mm²	U128A
250/1A	1	0.2 V/A	3 m, 0.5 mm²	U128B
300/1A	1	0.2 V/A	3 m, 0.5 mm²	U128C
400/1A	1	0.2 V/A	3 m, 0.5 mm²	U128D
500/1A	0.5	0.2 V/A	3 m, 0.5 mm²	U128E
250/5A	1	1 V/A	0.5 m, 1.5 mm²	U528A
300/5A	1	1 V/A	0.5 m, 1.5 mm²	U528B
400/5A	1	1 V/A	0.5 m, 1.5 mm²	U528C
500/5A	1	1 V/A	0.5 m, 1.5 mm²	U528D

SC50-E – Dia. 42 mm

Transmission factor	Class	Burden [1]	Secondary lead	Article number
250/1A	1	0.5 V/A	5 m, 0.5 mm²	U142A
300/1A	1	0.5 V/A	5 m, 0.5 mm²	U142B
400/1A	0.5	0.5 V/A	5 m, 0.5 mm²	U142C
500/1A	0.5	0.5 V/A	5 m, 0.5 mm²	U142D
600/1A	0.5	0.5 V/A	5 m, 0.5 mm²	U142E
750/1A	0.5	0.5 V/A	5 m, 0.5 mm²	U142F
800/1A	0.5	0.5 V/A	5 m, 0.5 mm²	U142G
1000/1A [2]	0.5	0.5 V/A	5 m, 0.5 mm²	U142H
300/5A	1	0.5 V/A	3 m, 1,5 mm²	U542A
400/5A	1	0.5 V/A	3 m, 1,5 mm²	U542B
500/5A	1	0.5 V/A	3 m, 1,5 mm²	U542C
600/5A	0.5	0.5 V/A	3 m, 1,5 mm²	U542D
750/5A	0.5	0.5 V/A	3 m, 1,5 mm²	U542E
800/5A	0.5	0.5 V/A	3 m, 1,5 mm²	U542F
1000/5A [2]	0.5	0.5 V/A	3 m, 1,5 mm²	U542G

[1] burden at the end of the secondary lead
[2] Ambient temperature –10 °C ... +40 °C

SC50-L – Dia. 2x 42 mm

Transmission factor	Class	Burden [1]	Secondary lead	Article number
250/1A	1	0,5 V/A	5 m, 0.5 mm²	U184A
300/1A	1	0,5 V/A	5 m, 0.5 mm²	U184B
400/1A	0,5	0,5 V/A	5 m, 0.5 mm²	U184C
500/1A	0,5	0,5 V/A	5 m, 0.5 mm²	U184D
600/1A	0,5	0,5 V/A	5 m, 0.5 mm²	U184E
750/1A	0,5	0,5 V/A	5 m, 0.5 mm²	U184F
800/1A	0,5	0,5 V/A	5 m, 0.5 mm²	U184G
1000/1A [2]	0,5	0,5 V/A	5 m, 0.5 mm²	U184H
300/5A	1	0,5 V/A	3 m, 1,5 mm²	U584A
400/5A	1	0,5 V/A	3 m, 1,5 mm²	U584B
500/5A	1	0,5 V/A	3 m, 1,5 mm²	U584C
600/5A	0,5	0,5 V/A	3 m, 1,5 mm²	U584D
750/5A	0,5	0,5 V/A	3 m, 1,5 mm²	U584E
800/5A	0,5	0,5 V/A	3 m, 1,5 mm²	U584F
1000/5A [2]	0,5	0,5 V/A	3 m, 1,5 mm²	U584G

[1] burden at the end of the secondary lead
[2] Ambient temperature –10 °C ... +40 °C

© Gossen Metrawatt GmbH
Edited in Germany • Subject to change, errors excepted • PDF version available on the Internet

All trademarks, registered trademarks, logos, product names, and company names are the property of their respective owners.

GOSSEN METRAWATT
Gossen Metrawatt GmbH
Südwestpark 15
90449 Nürnberg • Germany

Phone +49 911 8602-0
Fax +49 911 8602-669
E-mail info@gossenmetrawatt.com
www.gossenmetrawatt.com