E20794

Fixture for mounting and fine adjustment of laser sensors

MOUNTING FIXTURE LASER OL

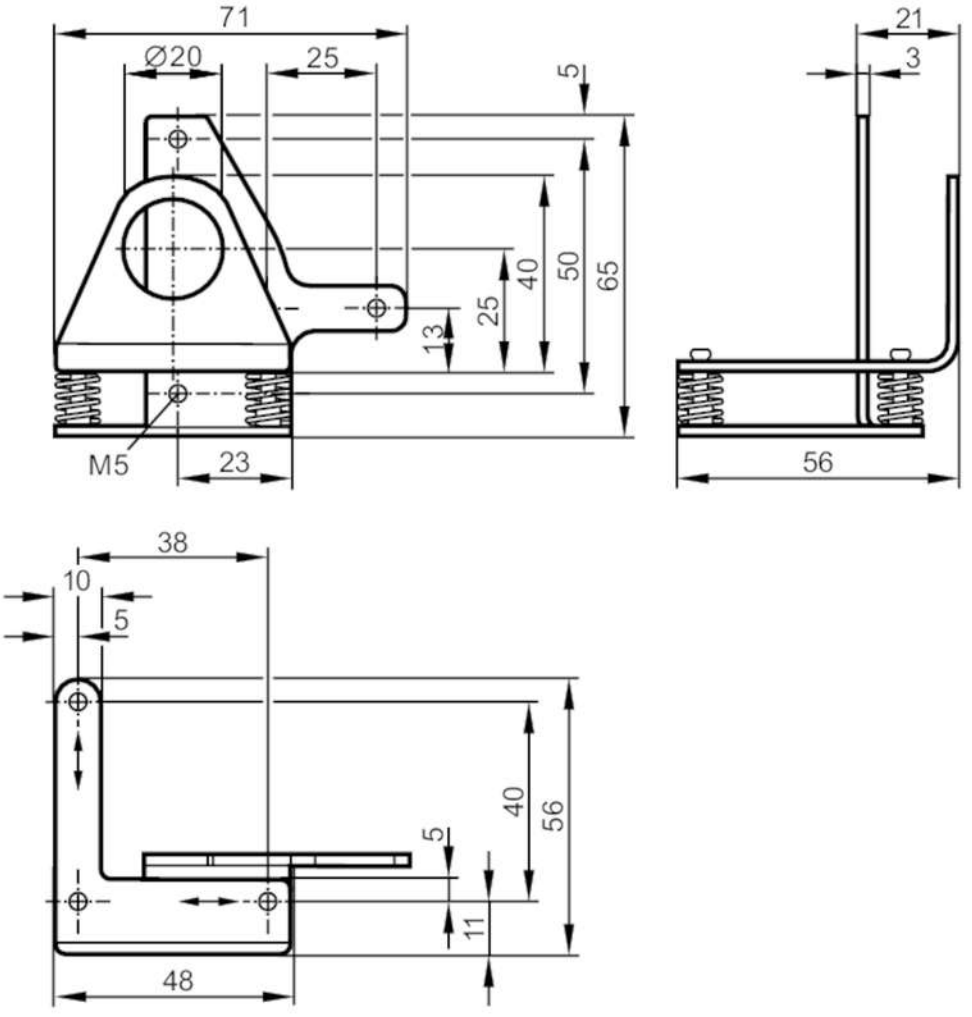

Application		
Design		clamp mounting
Mechanical data		
Weight	[g]	148
Type of mounting		rod or free-standing depending on the clamp
Materials		stainless steel (1.4571/316Ti)
Alignment range		fine adjustment in 2 axes ± 4°
Accessories		
Accessories (optional)		Clamp:, for rod mounting, E20795
		Clamp:, for free-standing mounting, E20796
Remarks		
Remarks		To fix O5 units M5 x 25 mm cylinder head bolts are needed.
Pack quantity		1 pcs.