LMT191

Level sensor for limit detection with overspill protection (German Federal Water Act)

LMACE-A12E-QPKG-2/US

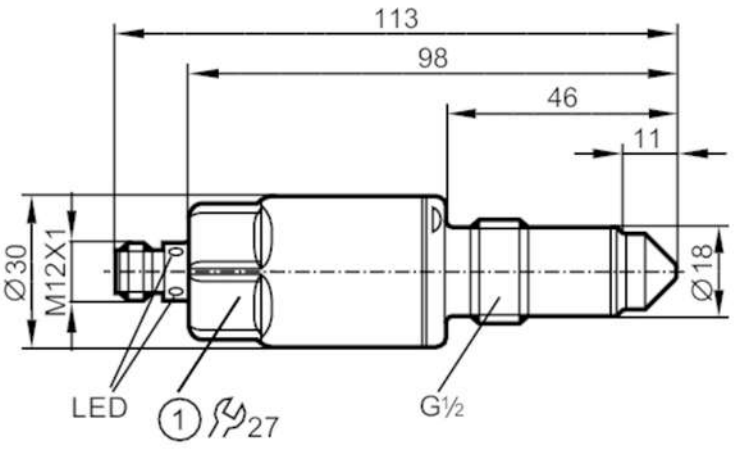

1 Tightening torque 20...25 Nm

Product characteristics			
Number of inputs and outputs		Number of digital outputs: 2	
Factory setting		hydrous media	
Process connection		threaded connection G 1/2 sealing cone	
Application			
Special feature		Gold-plated contacts	
Media		Liquids	
Recommended media		water; hydrous media; oils; oil-based media	
Cannot be used for		See the operating instructions, chapter "Function and features".	
Probe length	[mm]	11	
Tank pressure		-1...40; (applications subject to the German Federal Water Act : -0,5...10 bar) bar	-0.1...4; (applications subject to the German Federal Water Act : -0,5...10 bar) MPa
Oil			
Medium temperature	[°C]	-40...100; (applications subject to the German Federal Water Act 0...100 °C)	
Medium temperature short time	[°C]	-40...150; (1 h; applications subject to the German Federal Water Act : 0...100 °C)	
Water			
Medium temperature	[°C]	-40...85; (applications subject to the German Federal Water Act : 0...85 °C)	
Medium temperature short time	[°C]	-40...150; (1 h; applications subject to the German Federal Water Act : 0...100 °C)	
Electrical data			
Operating voltage	[V]	18...30 DC	
Current consumption	[mA]	< 50	
Protection class		III	
Reverse polarity protection		yes	
Measuring principle		capacitive	
Inputs / outputs			
Number of inputs and outputs		Number of digital outputs: 2	
Outputs			
Total number of outputs		2	

LMT191

Level sensor for limit detection with overspill protection (German Federal Water Act)

LMACE-A12E-QPKG-2/US

Output signal		switching signal; IO-Link	
Electrical design		PNP	
Number of digital outputs		2	
Max. voltage drop switching output DC	[V]	2.5	
Permanent current rating of switching output DC	[mA]	100	
Short-circuit protection		yes	
Type of short-circuit protection		pulsed	
Overload protection		yes	
Measuring/setting range			
Factory setting		hydrous media	
Response times			
Response time	[s]	< 0.5	
Interfaces			
Communication interface		IO-Link	
Transmission type		COM2 (38,4 kBaud)	
IO-Link revision		1.1	
SDCI standard		IEC 61131-9	
Profiles		Smart Sensor: Process Data Variable; Device Identification	
SIO mode		yes	
Required master port type		A	
Process data analogue		1	
Process data binary		2	
Min. process cycle time	[ms]	2.3	
Supported DeviceIDs		**Type of operation**	**DeviceID**
		default	449
Operating conditions			
Ambient temperature	[°C]	-40...85	
Note on ambient temperature		Medium temperature 100...150 °C	
		-40...60 °C	
Storage temperature	[°C]	-40...85	
Protection		IP 68; IP 69K	
Tests / approvals			
Approval		WHG; General building authority approval; overflow prevention	
EMC		DIN EN 61000-6-2	
		DIN EN 61000-6-4	open tanks
		DIN EN 61000-6-3	closed tanks
Shock resistance		DIN EN 60068-2-27	50 g (11 ms)
Vibration resistance		DIN EN 60068-2-6	20 g (10...2000 Hz)
MTTF	[years]	223.21	
UL approval		UL Approval no.	H001
Mechanical data			
Weight	[g]	217	

LMT191

Level sensor for limit detection with overspill protection (German Federal Water Act)

LMACE-A12E-QPKG-2/US

Dimensions	[mm]	Ø 30 / L = 113
Materials		stainless steel (316L/1.4404); PEEK; PEI; FKM
Materials (wetted parts)		PEEK; surface characteristics: Ra < 0,8 / Rz 4
Process connection		threaded connection G 1/2 sealing cone

Displays / operating elements

Display	switching status	LED, yellow
	operating status	LED, green

Remarks

Pack quantity	1 pcs.

Electrical connection

Connector: 1 x M12; coding: A; Contacts: gold-plated



Connection

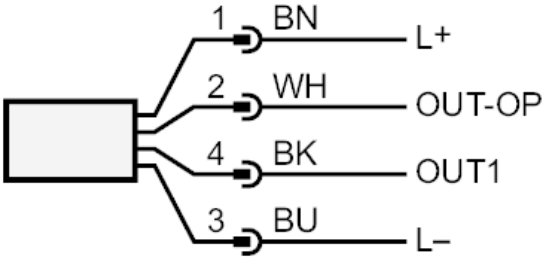

OUT1:	switching output
OUT-OP	switching output overflow prevention to the German Federal Water Act (WHG)
	colours to DIN EN 60947-5-2
	Core colours :
BK =	black
BN =	brown
BU =	blue
WH =	white