

	Suction Strainers	**48 - 51**
	SUS (Polyamide End Cap)	**50**
	SUS (Aluminium End Cap)	**51**

D

Suction Strainer (Polyamide End Cap)
Type SUS



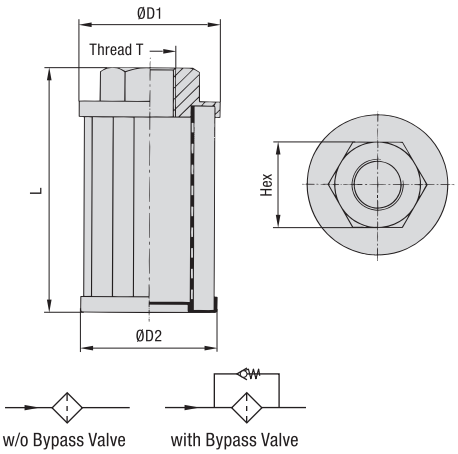

Flow Characteristics

Nominal Flow Rate vs. Pressure Drop ΔP

The following characteristics are valid for Mineral oils with a mass density of 0,85 kg/dm³ and a kinematic viscosity of 30 mm²/s (cSt) at +38 °C / +100 °F.

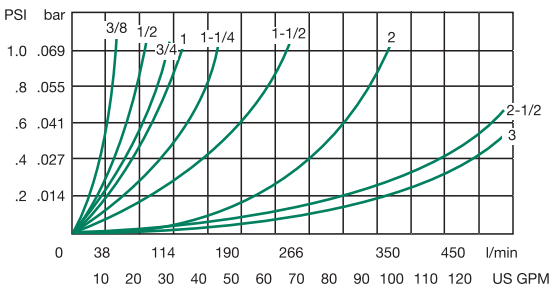

D

Characteristics

Designed as in-tank suction strainer elements for direct installation into suction lines of pumps; should always be installed below the minimum fluid level of the reservoir

Features

- Available with female BSP thread (ISO 228) or female NPT thread (ANSI B1.20.1)
- Operating temperature range: -20 °C ... +100 °C / -4 °F ... +212 °F

Media Compatibility

- Suitable for use with Mineral and Petroleum based hydraulic fluids (HL and HLP)

Materials

- Threaded end cap made of glass-fibre reinforced Polyamide (PA); see page 59 for version with Aluminium end cap
- Lower end cap and support tube made of Steel, zinc-plated
- Standard filter material is Stainless Steel Mesh (125 µm); alternative micron ratings of 60 µm and 250 µm on request

Contact STAUFF for alternative materials.

Options

- Integrated bypass valve with an opening pressure of 0,2 bar (3 PSI) to reduce the risks of high-pressure drops that can be caused by contaminated strainer elements or high-viscosity fluids

Special sizes, designs, materials and configurations are available on request. Contact STAUFF for details.

Dimensions and Technical Data (Female BSP Threaded Version)

Group Size	Thread T	Dimensions (mm/in) ØD1	ØD2	L	Hex	Filter Surface	Max. Flow Rate
040-G06-075	G3/8 BSP	39,5	38,5	75	22	279 cm²	12 l/min
		1.56	1.53	2.93	.87	43 in²	3.1 US GPM
050-G06-067	G3/8 BSP	50	49	67	26	296 cm²	12 l/min
		1.97	1.93	2.64	1.02	46 in²	3.1 US GPM
050-G08-105	G1/2 BSP	50	49	105	26	518 cm²	15 l/min
		1.97	1.93	4.13	1.02	80 in²	3.9 US GPM
068-G12-105	G3/4 BSP	68	66	105	34	676 cm²	25 l/min
		2.68	2.60	4.13	1.34	105 in²	6.5 US GPM
068-G16-140	G1 BSP	68	66	140	42	930 cm²	50 l/min
		2.68	2.60	5.51	1.65	144 in²	13.0 US GPM
088-G20-140	G1-1/4 BSP	88	85	140	50	1172 cm²	65 l/min
		3.46	3.35	5.51	1.97	182 in²	16.9 US GPM
088-G24-140	G1-1/2 BSP	88	85	140	60	1172 cm²	140 l/min
		3.46	3.35	5.51	2.36	182 in²	36.4 US GPM
102-G24-200	G1-1/2 BSP	102	100	200	72	2427 cm²	140 l/min
		4.02	3.94	7.87	2.83	376 in²	36.4 US GPM
102-G32-200	G2 BSP	102	100	200	72	2427 cm²	230 l/min
		4.02	3.94	7.87	2.83	376 in²	59.8 US GPM
102-G32-225	G2 BSP	102	100	225	72	2811 cm²	230 l/min
		4.02	3.94	8.86	2.83	436 in²	59.8 US GPM
102-G32-260	G2 BSP	102	100	260	72	3249 cm²	230 l/min
		4.02	3.94	10.24	2.83	504 in²	59.8 US GPM
102-G32-300	G2 BSP	102	100	300	72	3798 cm²	230 l/min
		4.02	3.94	11.81	2.83	589 in²	59.8 US GPM
131-G40-191	G2-1/2 BSP	131	128	191	86	2430 cm²	340 l/min
		5.16	5.04	10.24	3.39	377 in²	88.4 US GPM
131-G40-212	G2-1/2 BSP	131	128	212	86	2748 cm²	340 l/min
		5.16	5.04	8.35	3.39	426 in²	88.4 US GPM
131-G48-272	G3 BSP	131	128	272	96	3626 cm²	400 l/min
		5.16	5.04	10.71	3.78	562 in²	104 US GPM
150-G32-151	G2 BSP	150	145	151	70	1812 cm²	400 l/min
		5.91	5.71	5.94	2.76	281 in²	104 US GPM

Dimensions and Technical Data (Female NPT Threaded Version)

Group Size	Thread T	Dimensions (mm/in) ØD1	ØD2	L	Hex	Filter Surface	Max. Flow Rate
050-N06-067	3/8 NPT	50	49	67	26	296 cm²	12 l/min
		1.97	1.93	2.64	1.02	46 in²	3.1 US GPM
050-N06-090	3/8 NPT	50	49	90	26	430 cm²	12 l/min
		1.97	1.93	3.54	1.02	67 in²	3.1 US GPM
050-N08-105	1/2 NPT	50	49	105	26	518 cm²	15 l/min
		1.97	1.93	4.13	1.02	80 in²	3.9 US GPM
068-N12-105	3/4 NPT	68	66	105	34	676 cm²	25 l/min
		2.68	2.60	4.13	1.34	105 in²	6.5 US GPM
068-N16-140	1 NPT	68	66	140	42	930 cm²	50 l/min
		2.68	2.60	5.51	1.65	144 in²	13.0 US GPM
088-N20-140	1-1/4 NPT	88	85	140	50	1172 cm²	65 l/min
		3.46	3.35	5.51	1.97	182 in²	16.9 US GPM
088-N20-195	1-1/4 NPT	88	85	195	60	1709 cm²	65 l/min
		3.46	3.35	7.68	2.36	265 in²	16.9 US GPM
088-N24-140	1-1/2 NPT	88	85	140	60	1172 cm²	140 l/min
		3.46	3.35	5.51	2.36	182 in²	36.4 US GPM
088-N24-226	1-1/2 NPT	88	85	226	60	2012 cm²	140 l/min
		3.46	3.35	8.90	2.36	312 in²	36.4 US GPM
088-N24-260	1-1/2 NPT	88	85	260	60	2344 cm²	140 l/min
		3.46	3.35	10.24	2.36	363 in²	36.4 US GPM
102-N24-200	1-1/2 NPT	102	100	200	72	2427 cm²	140 l/min
		4.02	3.94	7.87	2.83	376 in²	36.4 US GPM
102-N32-260	2 NPT	102	100	260	72	3249 cm²	230 l/min
		4.02	3.94	10.24	2.83	504 in²	59.8 US GPM
131-N40-212	2-1/2 NPT	131	128	212	86	2748 cm²	340 l/min
		5.16	5.04	8.35	3.39	426 in²	88.4 US GPM
131-N48-272	3 NPT	131	128	272	96	3626 cm²	400 l/min
		5.16	5.04	10.71	3.78	562 in²	104 US GPM

Suction Strainer (Aluminium End Cap) Type SUS

Flow Characteristics

Nominal Flow Rate vs. Pressure Drop ΔP

The following characteristics are valid for Mineral oils with a mass density of 0,85 kg/dm³ and a kinematic viscosity of 30 mm²/s (cSt) at +38 °C / +100 °F.

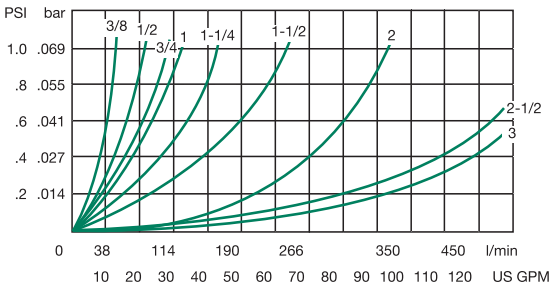

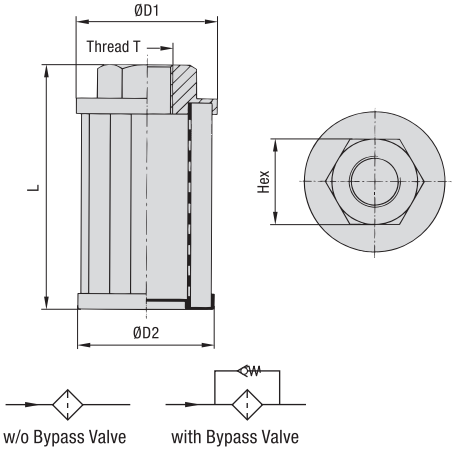



Characteristics

Designed as in-tank suction strainer elements for direct installation into suction lines of pumps; should always be installed below the minimum fluid level of the reservoir

Features

- Available with female NPT thread (ANSI B1.20.1)
- Operating temperature range: -20 °C ... +100 °C / -4 °F ... +212 °F

Media Compatibility

- Suitable for use with Mineral and Petroleum based hydraulic fluids (HL and HLP)

Materials

- Threaded end cap made of Aluminium; see page 58 for version with Polyamide (PA) end cap
- Lower end cap and support tube made of Steel, zinc-plated
- Filter material made of Stainless Steel Mesh (125 µm); alternative micron ratings of 60 µm and 250 µm on request

Contact STAUFF for alternative materials.

Options

- Integrated bypass valve with an opening pressure of 0,2 bar (3 PSI) to reduce the risks of high-pressure drops that can be caused by contaminated strainer elements or high-viscosity fluids

Special sizes, designs, materials and configurations are available on request. Contact STAUFF for details.

Dimensions and Technical Data (Female NPT Threaded Version)

Group Size	Thread T	Dimensions (mm/in)				Filter	Max.
		ØD1	ØD2	L	Hex	Surface	Flow Rate
050-N06-067	3/8 NPT	50	49	67	26	296 cm²	12 l/min
		1.97	1.93	2.64	1.02	46 in²	3.1 US GPM
050-N06-090	3/8 NPT	50	49	90	26	430 cm²	12 l/min
		1.97	1.93	3.54	1.02	67 in²	3.1 US GPM
050-N08-105	1/2 NPT	50	49	105	26	518 cm²	15 l/min
		1.97	1.93	4.13	1.02	80 in²	3.9 US GPM
068-N12-105	3/4 NPT	68	66	105	34	676 cm²	25 l/min
		2.68	2.60	4.13	1.34	105 in²	6.5 US GPM
068-N16-140	1 NPT	68	66	140	42	930 cm²	50 l/min
		2.68	2.60	5.51	1.65	144 in²	13.0 US GPM
088-N20-140	1-1/4 NPT	88	85	140	50	1172 cm²	65 l/min
		3.46	3.35	5.51	1.97	182 in²	16.9 US GPM
088-N20-195	1-1/4 NPT	88	85	195	60	1709 cm²	65 l/min
		3.46	3.35	7.68	2.36	265 in²	16.9 US GPM
088-N24-140	1-1/2 NPT	88	85	140	60	1172 cm²	140 l/min
		3.46	3.35	5.51	2.36	182 in²	36.4 US GPM
088-N24-226	1-1/2 NPT	88	85	226	60	2012 cm²	140 l/min
		3.46	3.35	8.90	2.36	312 in²	36.4 US GPM
088-N24-260	1-1/2 NPT	88	85	260	60	2344 cm²	140 l/min
		3.46	3.35	10.24	2.36	363 in²	36.4 US GPM
088-N32-260	2 NPT	88	85	260	70	2344 cm²	230 l/min
		3.46	3.35	10.24	2.76	363 in²	59.8 US GPM
150-N40-213	2-1/2 NPT	150	145	213	90	2741 cm²	340 l/min
		5.91	5.71	8.39	3.54	425 in²	88.4 US GPM
150-N48-272	3 NPT	150	145	272	100	3625 cm²	400 l/min
		5.91	5.71	10.71	3.94	562 in²	104 US GPM

Order Codes

SUS	-	088-G24-140	-	125	-	P	-	O
①		②		③		④		⑤

① Type

Suction Strainer for direct installation into suction lines of pumps	**SUS**

② Group Size

Select 'Group Size' from corresponding column in dimensional tables

The group size is defined by the diameter ØD1 of the threaded end cap, the thread code (Type and size) and the total length of the suction strainer element (e.g. 040-B06F-075).

③ Filter Material / Micron Rating

Stainless Steel Mesh, 125 µm (standard option)	**125**
Stainless Steel Mesh, 60 µm	**060**
Stainless Steel Mesh, 250 µm	**250**

Contact STAUFF for alternative materials / micron ratings.

④ Material of Threaded End Cap

Glass-fibre reinforced Polyamide	**P**
Aluminium (for female NPT threaded version only)	**A**

⑤ Bypass Option

Without bypass valve (standard option)	**O**
Integrated bypass valve with opening pressure of 0,2 bar (3 PSI)	**B0.2**