EBC045

Splitter box

ZDO8F039MSS0000-STGH120MSS

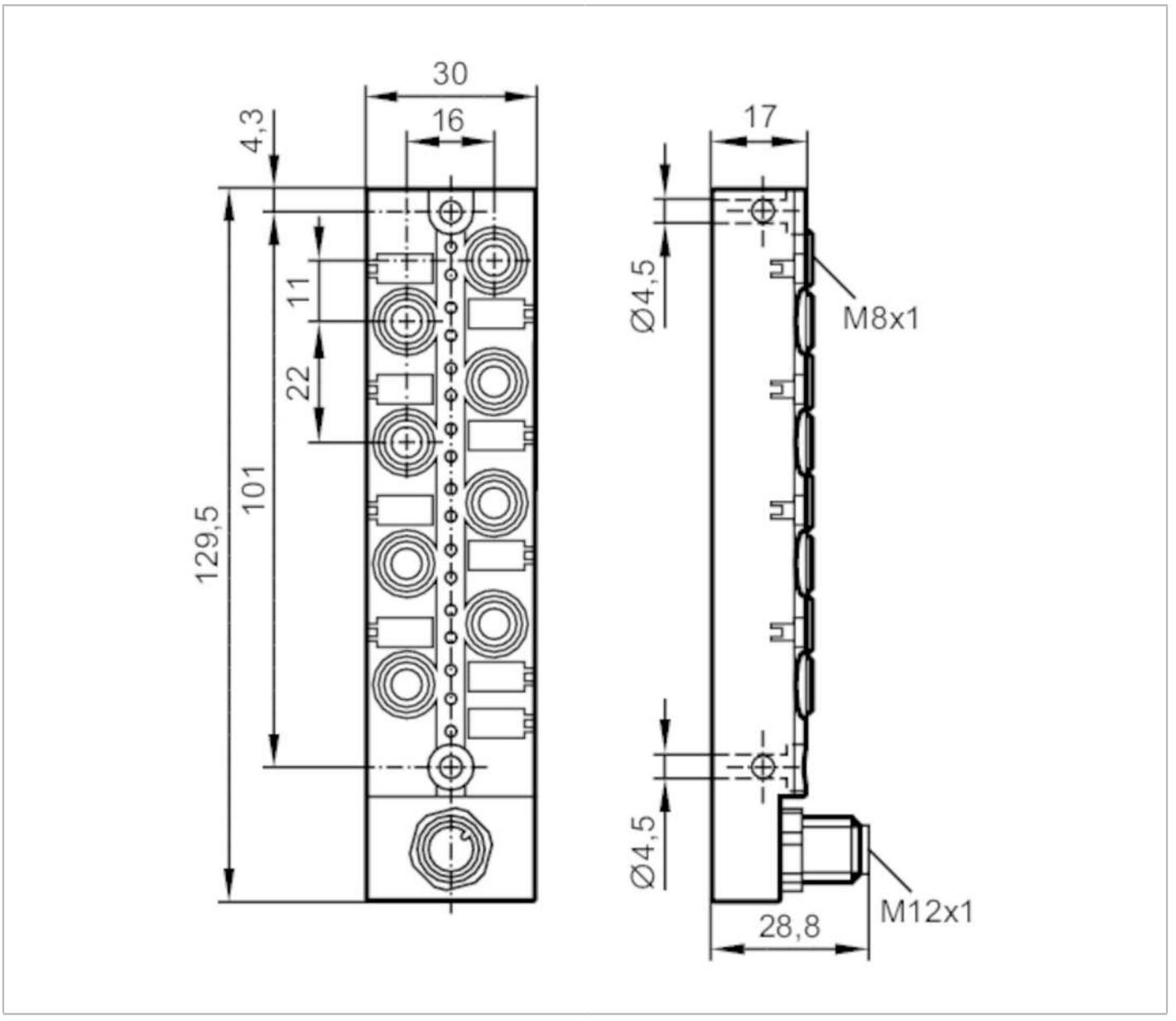

Application		
Special feature		Gold-plated contacts
Electrical data		
Operating voltage	[V]	15...30 DC
Protection class		III
Max. current load per module/slot	[A]	1
Max. current load total	[A]	1
Outputs		
Electrical design		PNP
Operating conditions		
Ambient temperature	[°C]	-25...80

EBC045

Splitter box

ZDO8F039MSS0000-STGH120MSS

Ambient temperature (moving)	[°C]	-5...60	
Protection		IP 67	
Mechanical data			
Weight	[g]	125	
Dimensions	[mm]	28.8 x 30 x 129.5	
Materials		PBT-GF20; brass nickel-plated	
Moulded-body material		PBT-GF 20 / brass, nickel-plated	
Number of ports splitter box		8	
Connector type		M8	
Displays / operating elements			
Display		switching status	8 x LED, yellow
		operation	1 x LED, green
Remarks			
Pack quantity		1 pcs.	

Electrical connection - Connection

Connector: 1 x M12; Moulded body: PBT-GF 20 / brass, nickel-plated; Contacts: gold-plated; Tightening torque: 0.8...1.5 Nm

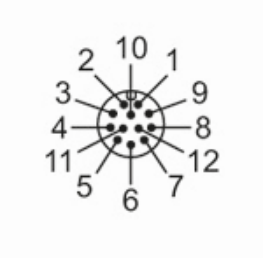

EBC045

Splitter box

ZDO8F039MSS0000-STGH120MSS

Connection

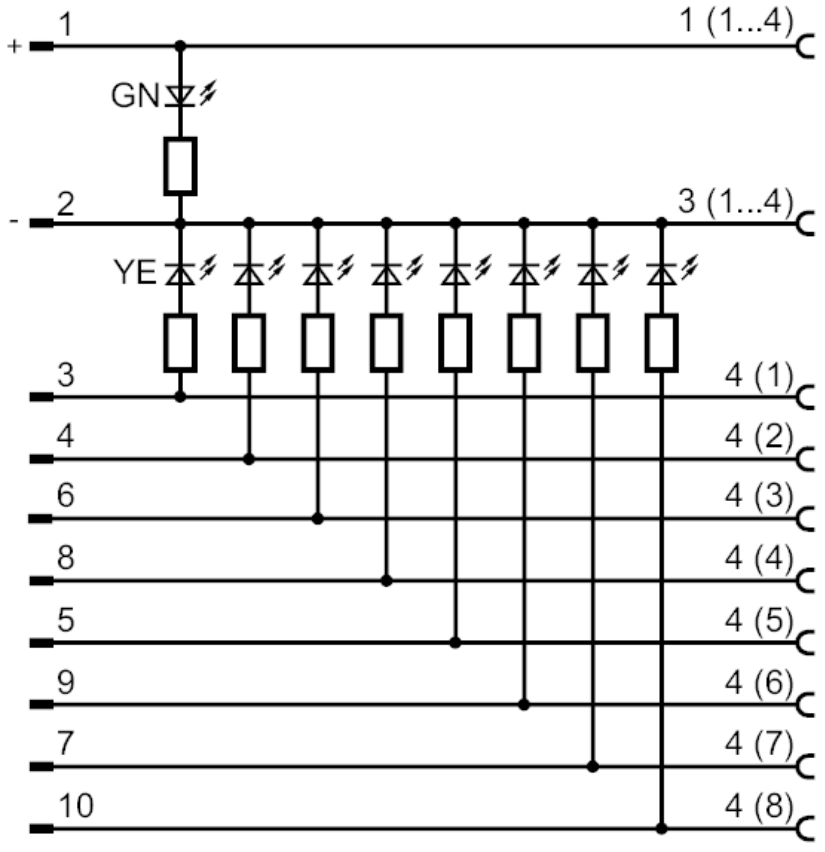

Electrical connection - slot

Connector: 8 x M8; coding: A; Moulded body: PBT-GF 20 / brass, nickel-plated; Contacts: gold-plated; Tightening torque: 0.8...1.5 Nm

