Brand of NTN corporation

Technical data

UKF209H

Bearing units



Grey cast housing, radial insert ball bearing with adapter sleeve,seal with slinger

KIT CONTENT

UK209G2H, F209

VISUAL (S)

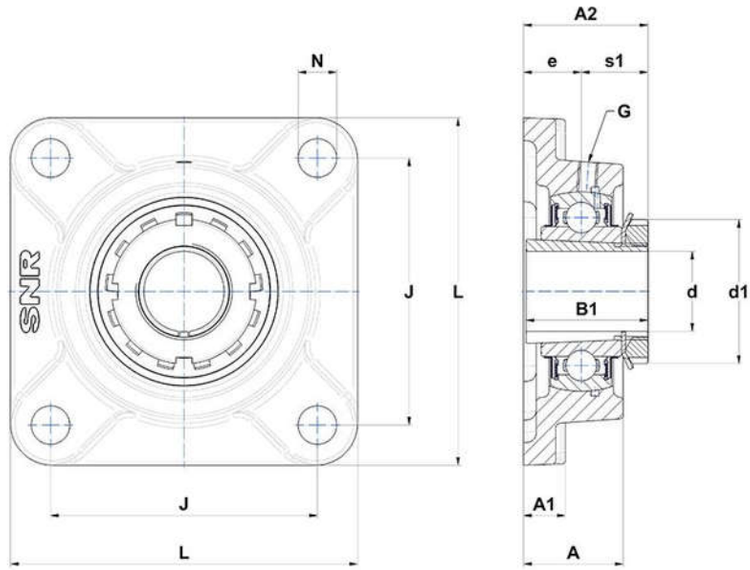

PRODUCT DEFINITION

Brand	SNR
A - Housing height	38 mm
A1 - Housing foot height / flange height	16 mm
A2 - Total height from mounting surface	48 mm
B - Width of Inner Ring	30 mm
B1 - Overall width Inner Ring	50 mm

PRODUCT DEFINITION	
d - Shaft diameter	40 mm
d1 - Outer dia of eccent. Lock. collar / nut of adapter sleeve	65 mm
e - Distance mounting surface to bearing center	22 mm
G - Grease fitting	M6x1
J - Mounting holes distance	105 mm
L - Housing width / diameter	137 mm
N - Mounting hole dimension	16 mm
s1 - Distance nut to middle of bearing raceway	26 mm

PRODUCT PERFORMANCE	
C - Dynamic load rating	31850000 mN
C0 - Static load rating	20800000 mN
Operating temperature min.	253,15 °K
Operating temperature max.	373,15 °K

OTHER FEATURES	
Mass	2,24 kg
Adapter sleeve designation	H2309