D2E097 Series Centrifugal Blower

Ø 97mm



- AC dual inlet, forward curved centrifugal blower. Via a bracket, the integrated external-rotor motor is mounted on one side of the housing.
- Housing and impeller made of galvanised sheet-steel. Forward curved impellers are directly press-fitted onto the rotor of the external-rotor motor.
- Direction of rotation is CW as seen from inlet opposite the cable exit. Insulation class "B".
- Maintenance-free ball bearings.
- UL, CSA, VDE approvals on some models, please contact application engineering.

Part Number	Curve	CFM @ 0	VAC	Hertz	Power (W)	dBA	Max Amb. Temp C	Bearing Type	Features	Capacitor (µF)	Wgt. (lbs)
D2E097-CB11-26	1	120	115	60	43	47	60	Ball	Leads	5	2.69
D2E097-CB11-32	1	120	115	60	43	47	60	Ball	Leads	5	2.69
D2E097-CB01-02	2	106	230	60*	42	47	60	Ball	Leads	1.5	2.88
D2E097-CB01-12	2	106	230	60*	42	47	60	Ball	Leads	1.5	2.88
D2E097-BE01-65	3	156	230	60*	54	47	50	Ball	Leads	2	3.31

* 50 Hz data available.

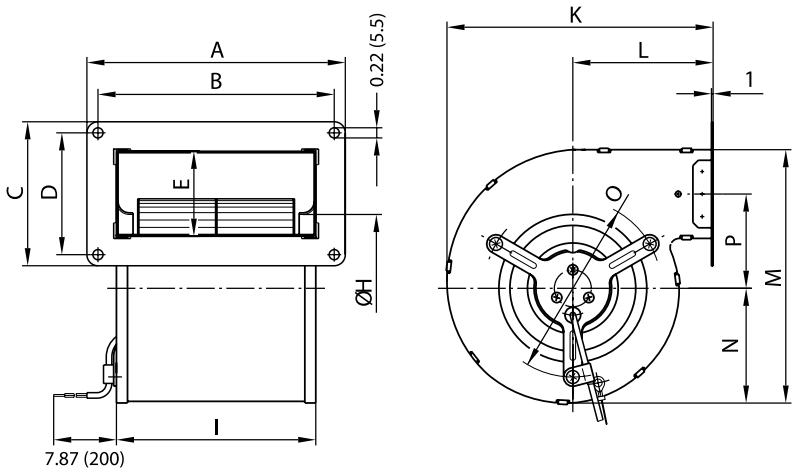

Type	A	B	C	D	E	H	I	K	L	M	N	O	P
D2E097-CB	140 (5.51)	128 (5.04)	78 (3.07)	66 (2.60)	46 (1.81)	80.0 (3.15)	108 (4.25)	144 (5.67)	76 (2.99)	137 (5.39)	62 (2.44)	96 (3.78)	51.0 (2.01)
D2E097-BE	180 (7.09)	168 (6.61)	100 (3.94)	88 (3.46)	67 (2.64)	79.5 (3.13)	146 (5.75)	162 (6.38)	86 (3.39)	165 (6.50)	68 (2.68)	114 (4.49)	62.5 (2.46)

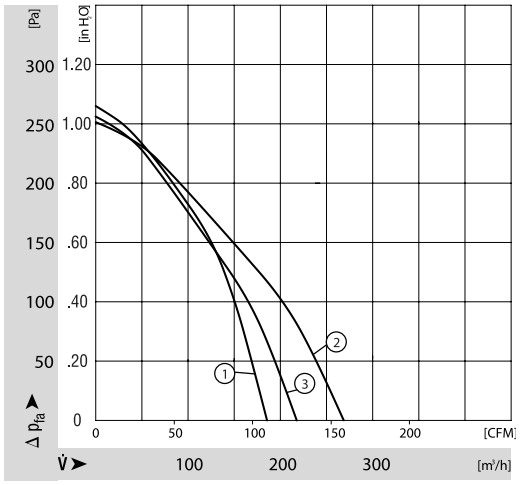

ebmpapst

e-mail: sales@us.ebmpapst.com · TEL: 860-674-1515 · FAX: 860-674-8536
ebm-papst Inc., 100 Hyde Road, Farmington, CT 06034 USA

ebm-papst Inc., 2006 © ebm-papst Inc. reserves the right to change any specifications or data without notice