DATASHEET - DILH1400/22(RAW250)



Contactor, Ith =Ie: 1714 A, RAW 250: 230 - 250 V 50 - 60 Hz/230 - 350 V DC, AC and DC operation, Screw connection

Powering Business Worldwide™

Part no.	**DILH1400/22(RAW250)**
Catalog No.	**272441**
Alternate Catalog No.	**XTCEC14P22B**
EL-Nummer (Norway)	**4130500**

Delivery program

Product range			Contactors
Application			Mains contactors for resistive loads from 1000 A
Subrange			AC -1 contactors greater than 1000 A
Utilization category			AC-1: Non-inductive or slightly inductive loads, resistance furnaces
Connection technique			Screw connection
Rated operational current			
AC-1			
Conventional free air thermal current, 3 pole, 50 - 60 Hz			
Open			
at 40 °C	$I_{th} = I_e$	A	1714
Conventional free air thermal current, 1 pole			
open	I_{th}	A	3500
Contact sequence			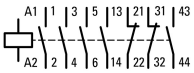
For use with			DILM820-XHI…
Actuating voltage			RAW 250: 230 - 250 V 50 - 60 Hz/230 - 350 V DC
Voltage AC/DC			AC and DC operation
Auxiliary contacts			
possible variants at auxiliary contact module fitting options			on the side: 2 x DILM820-XHI11(V)-SI; 2 x DILM820-XHI11-SA
Side mounting auxiliary contacts			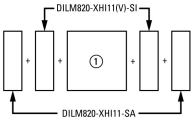
Instructions			Interlocked opposing contacts according to IEC/EN 60947-5-1 Appendix L, inside the auxiliary contact module Auxiliary contacts used as mirror contacts according to IEC/EN 60947-4-1 Appendix F (not N/C late open)
Instructions			integrated suppressor circuit in actuating electronics 660 V, 690 V or 1000 V: not directly reversing

Note concerning the product
Classical
A1/A2 are attached to power as normal

DILM250 to DILM1000, DILH1400

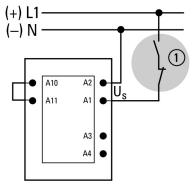

Direct from the PLC

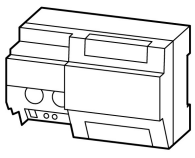

A 24 V output from the PLC can be directly connected to the connections A3/A4.

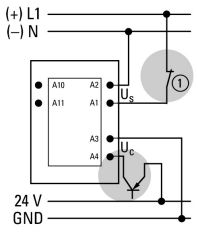

From a lower-power actuating device

Low-power actuating devices such as PCB relays, actuating devices or position switches can be directly connected to A10/A11.

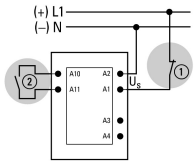

① Stopping in case of emergency (Emergenca-stop)

② max. capacity 6 nF

Technical data

General

Standards			IEC/EN 60947, VDE 0660, UL, CSA, CCC
Lifespan, mechanical			
AC operated	Operations	x 10^6	5
DC operated	Operations	x 10^6	5
Operating frequency, mechanical			
AC operated	Operations/h		1000
DC operated	Operations/h		1000
Climatic proofing			Damp heat, constant, to IEC 60068-2-78 Damp heat, cyclic, to IEC 60068-2-30
Ambient temperature			
Open		°C	-40 - +60
Storage		°C	- 40 - + 80
Mounting position			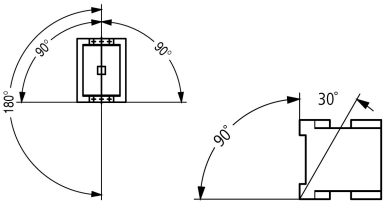
Mechanical shock resistance (IEC/EN 60068-2-27)			
Half-sinusoidal shock, 10 ms			
Main contacts			
N/O contact		g	10
Auxiliary contacts			
N/O contact		g	10
N/C contact		g	8
Degree of Protection			IP00
Altitude		m	Max. 2000
Weight		kg	14.4
Terminal capacity main cable			
Busbar	Width	mm	80
Main cable connection screw/bolt			M12
Tightening torque		Nm	35
Terminal capacity control circuit cables			
Solid		mm^2	1 x (0.75 - 2.5) 2 x (0.75 - 2.5)
Flexible with ferrule		mm^2	1 x (0.75 - 2.5) 2 x (0.75 - 2.5)
Solid or stranded		AWG	18 - 14
Stripping length		mm	10
Control circuit cable connection screw/bolt			M3.5
Tightening torque		Nm	1.2
Tool			
Main cable			
Width across flats		mm	18
Control circuit cables			
Pozidriv screwdriver		Size	2
Standard screwdriver		mm	0.8 x 5.5/1 x 6

Main conducting paths

Rated impulse withstand voltage	U_{imp}	V AC	8000
Overvoltage category/pollution degree			III/3
Rated insulation voltage	U_i	V AC	1000
Rated operational voltage	U_e	V AC	1000
Safe isolation to EN 61140			
between coil and contacts		V AC	1000
between the contacts		V AC	1000
Making capacity (p.f. to IEC/EN 60947)		A	9840
Breaking capacity			
220 V 230 V		A	8200
380 V 400 V		A	8200
500 V		A	8200
660 V 690 V		A	8200
1000 V		A	5800
Component lifespan			
			AC1: See → Engineering, characteristic curves

AC

AC-1			
Rated operational current			
Conventional free air thermal current, 3 pole, 50 - 60 Hz			
Open			
at 40 °C	$I_{th} = I_e$	A	1714
at 50 °C	$I_{th} = I_e$	A	1533
at 55 °C	$I_{th} = I_e$	A	1462
at 60 °C	$I_{th} = I_e$	A	1400
Conventional free air thermal current, 1 pole			
Note			at maximum permissible ambient air temperature
open	I_{th}	A	3500

Current heat loss

3 pole, at I_{th} (60°)		W	189
Current heat loss at I_e to AC-3/400 V		W	0.032

Magnet systems

Voltage tolerance			
U_S			230 - 250 V 50/60 Hz 230 - 350 V DC
AC operated	Pick-up		0.7 x $U_{S\ min}$ - 1.15 x $U_{S\ max}$
DC operated	Pick-up		0.7 x $U_{S\ min}$ - 1.15 x $U_{S\ max}$
AC operated	Drop-out		0.2 x $U_{S\ max}$ - 0.6 x $U_{S\ min}$
DC operated	Drop-out		0.2 x $U_{S\ max}$ - 0.6 x $U_{S\ min}$
Power consumption of the coil in a cold state and 1.0 x U_S			
Note on power consumption			Control transformer with $u_k \leqq 7\%$
Pull-in power	Pick-up	VA	800
Pull-in power	Pick-up	W	700
Sealing power	Sealing	VA	26.5
Sealing power	Sealing	W	11.4
Duty factor		% DF	100
Changeover time at 100 % U_S (recommended value)			
Main contacts			
Closing delay		ms	70
Opening delay		ms	40
Behaviour in marginal and transitional conditions			
Sealing			
Voltage interruptions			
(0 … 0.2 x $U_{c\ min}$) ≦ 10 ms			Time is bridged successfully

(0 … 0.2 x $U_{c\ min}$) > 10 ms			Drop-out of the contactor
Voltage drops			
(0.2 … 0.6 x $U_{c\ min}$) ≦ 12 ms			Time is bridged successfully
(0.2 … 0.6 x $U_{c\ min}$) > 12 ms			Drop-out of the contactor
(0.6 … 0.7 x $U_{c\ min}$)			Contactor remains switched on
Excess voltage			
(1.15 … 1.3 x $U_{c\ max}$)			Contactor remains switched on
Pick-up phase			
(0 … 0.7 x $U_{c\ min}$)			Contactor does not switch on
(0.7 x $U_{c\ min}$ … 1.15 x $U_{c\ max}$)			Contactor switches on with certainty
Admissible transitional contact resistance (of the external control circuit device when actuating A11)		mΩ	≦ 500
PLC signal level (A3 - A4) to IEC/EN 61131-2 (type 2)			
High		V	15
Low		V	5

Electromagnetic compatibility (EMC)

Electromagnetic compatibility			This product is designed for operation in industrial environments (environment A). Its use in residential environments (environment B) may cause radio-frequency interference, requiring additional noise suppression measures.

Rating data for approved types

Switching capacity			
General use		A	1600
Auxiliary contacts			
Pilot Duty			
AC operated			A600
DC operated			P300
General Use			
AC		V	600
AC		A	15
DC		V	250
DC		A	1
Special Purpose Ratings			
Resistance Air Heating			
480V 60Hz 3phase, 277V 60Hz 1phase		A	1400
600V 60Hz 3phase, 347V 60Hz 1phase		A	1400

Design verification as per IEC/EN 61439

Technical data for design verification			
Rated operational current for specified heat dissipation	I_n	A	1400
Heat dissipation per pole, current-dependent	P_{vid}	W	63
Equipment heat dissipation, current-dependent	P_{vid}	W	0
Static heat dissipation, non-current-dependent	P_{vs}	W	6.5
Heat dissipation capacity	P_{diss}	W	0
Operating ambient temperature min.		°C	-40
Operating ambient temperature max.		°C	60
IEC/EN 61439 design verification			
10.2 Strength of materials and parts			
10.2.2 Corrosion resistance			Meets the product standard's requirements.
10.2.3.1 Verification of thermal stability of enclosures			Meets the product standard's requirements.
10.2.3.2 Verification of resistance of insulating materials to normal heat			Meets the product standard's requirements.
10.2.3.3 Verification of resistance of insulating materials to abnormal heat and fire due to internal electric effects			Meets the product standard's requirements.
10.2.4 Resistance to ultra-violet (UV) radiation			Meets the product standard's requirements.
10.2.5 Lifting			Does not apply, since the entire switchgear needs to be evaluated.
10.2.6 Mechanical impact			Does not apply, since the entire switchgear needs to be evaluated.
10.2.7 Inscriptions			Meets the product standard's requirements.

10.3 Degree of protection of ASSEMBLIES			Does not apply, since the entire switchgear needs to be evaluated.
10.4 Clearances and creepage distances			Meets the product standard's requirements.
10.5 Protection against electric shock			Does not apply, since the entire switchgear needs to be evaluated.
10.6 Incorporation of switching devices and components			Does not apply, since the entire switchgear needs to be evaluated.
10.7 Internal electrical circuits and connections			Is the panel builder's responsibility.
10.8 Connections for external conductors			Is the panel builder's responsibility.
10.9 Insulation properties			
10.9.2 Power-frequency electric strength			Is the panel builder's responsibility.
10.9.3 Impulse withstand voltage			Is the panel builder's responsibility.
10.9.4 Testing of enclosures made of insulating material			Is the panel builder's responsibility.
10.10 Temperature rise			The panel builder is responsible for the temperature rise calculation. Eaton will provide heat dissipation data for the devices.
10.11 Short-circuit rating			Is the panel builder's responsibility. The specifications for the switchgear must be observed.
10.12 Electromagnetic compatibility			Is the panel builder's responsibility. The specifications for the switchgear must be observed.
10.13 Mechanical function			The device meets the requirements, provided the information in the instruction leaflet (IL) is observed.

Technical data ETIM 8.0

Low-voltage industrial components (EG000017) / Power contactor, AC switching (EC000066)			
Electric engineering, automation, process control engineering / Low-voltage switch technology / Contactor (LV) / Power contactor, AC switching (ecl@ss10.0.1-27-37-10-03 [AAB718015])			
Rated control supply voltage Us at AC 50HZ		V	230 - 250
Rated control supply voltage Us at AC 60HZ		V	230 - 250
Rated control supply voltage Us at DC		V	230 - 250
Voltage type for actuating			AC
Rated operation current Ie at AC-1, 400 V		A	1714
Rated operation current Ie at AC-3, 400 V		A	0
Rated operation power at AC-3, 400 V		kW	0
Rated operation current Ie at AC-4, 400 V		A	0
Rated operation power at AC-4, 400 V		kW	0
Rated operation power NEMA		kW	0
Modular version			No
Number of auxiliary contacts as normally open contact			2
Number of auxiliary contacts as normally closed contact			2
Type of electrical connection of main circuit			Rail connection
Number of normally closed contacts as main contact			0
Number of normally open contacts as main contact			3

Approvals

Product Standards			IEC/EN 60947-4-1; UL 60947-4-1; CSA - C22.2 No. 60947-4-1-14; CE marking
UL File No.			E29096
UL Category Control No.			NLDX
CSA File No.			012528
CSA Class No.			3211-04
North America Certification			UL listed, CSA certified
Specially designed for North America			No

Characteristics

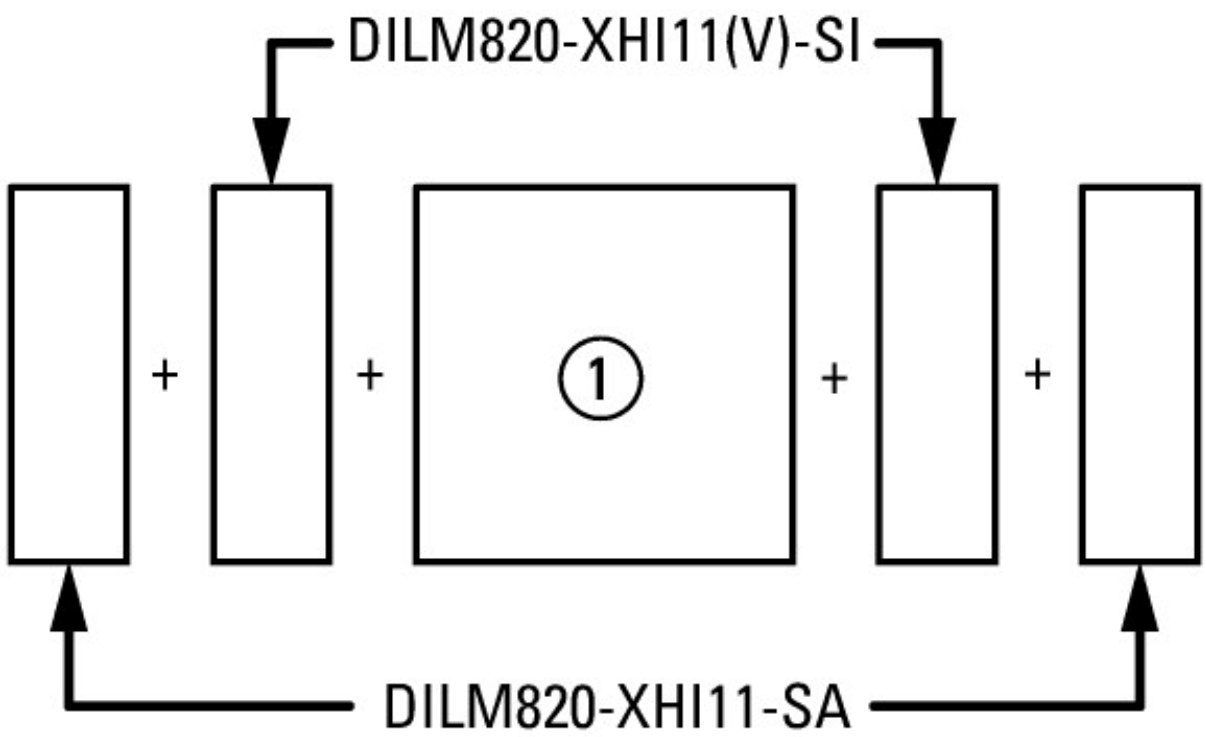

on the side: 2 x DILM820-XHI11(V)-SI; 2 x DILM820-XHI11-SA

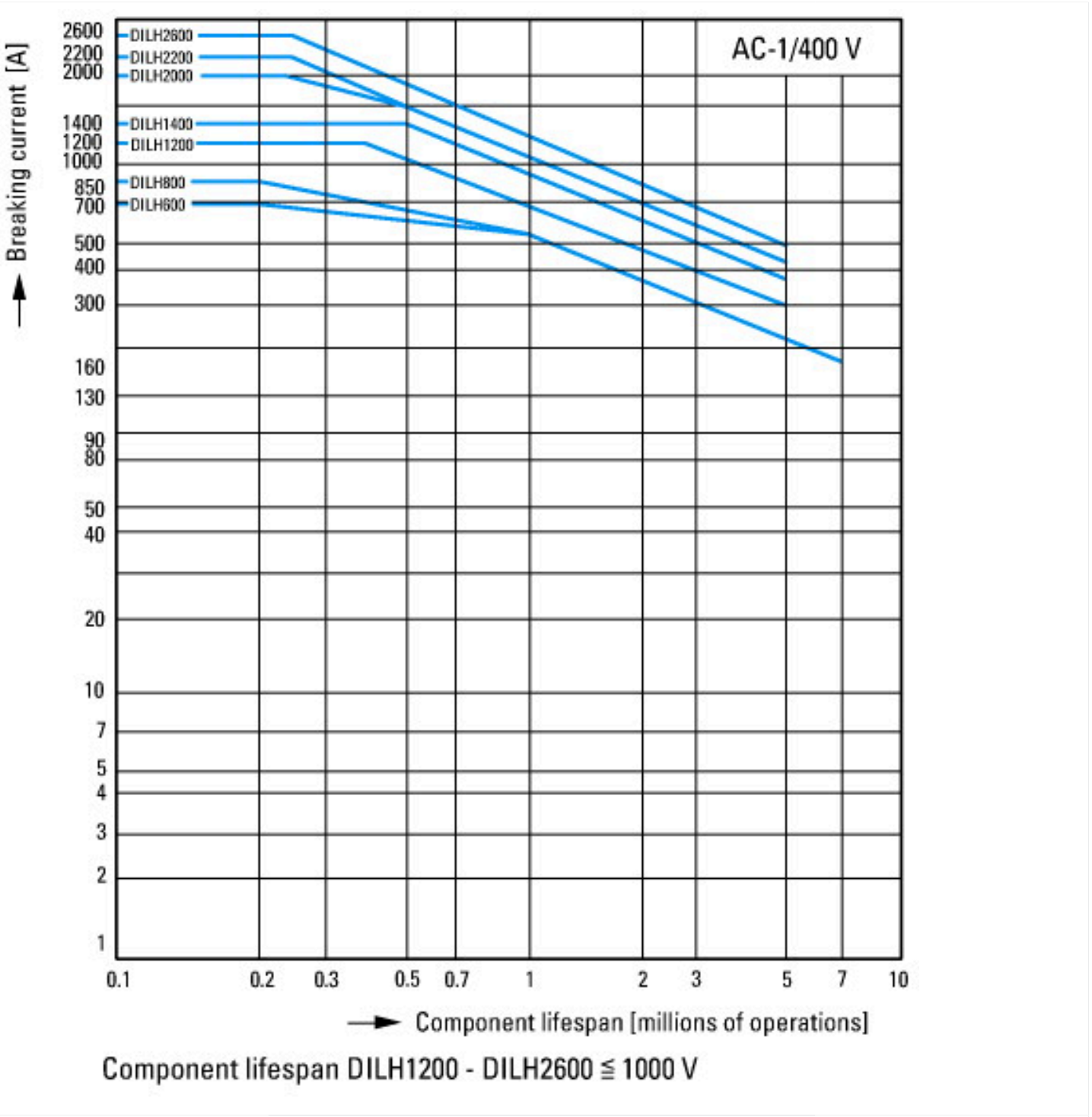

Electrical lifespan AC-1

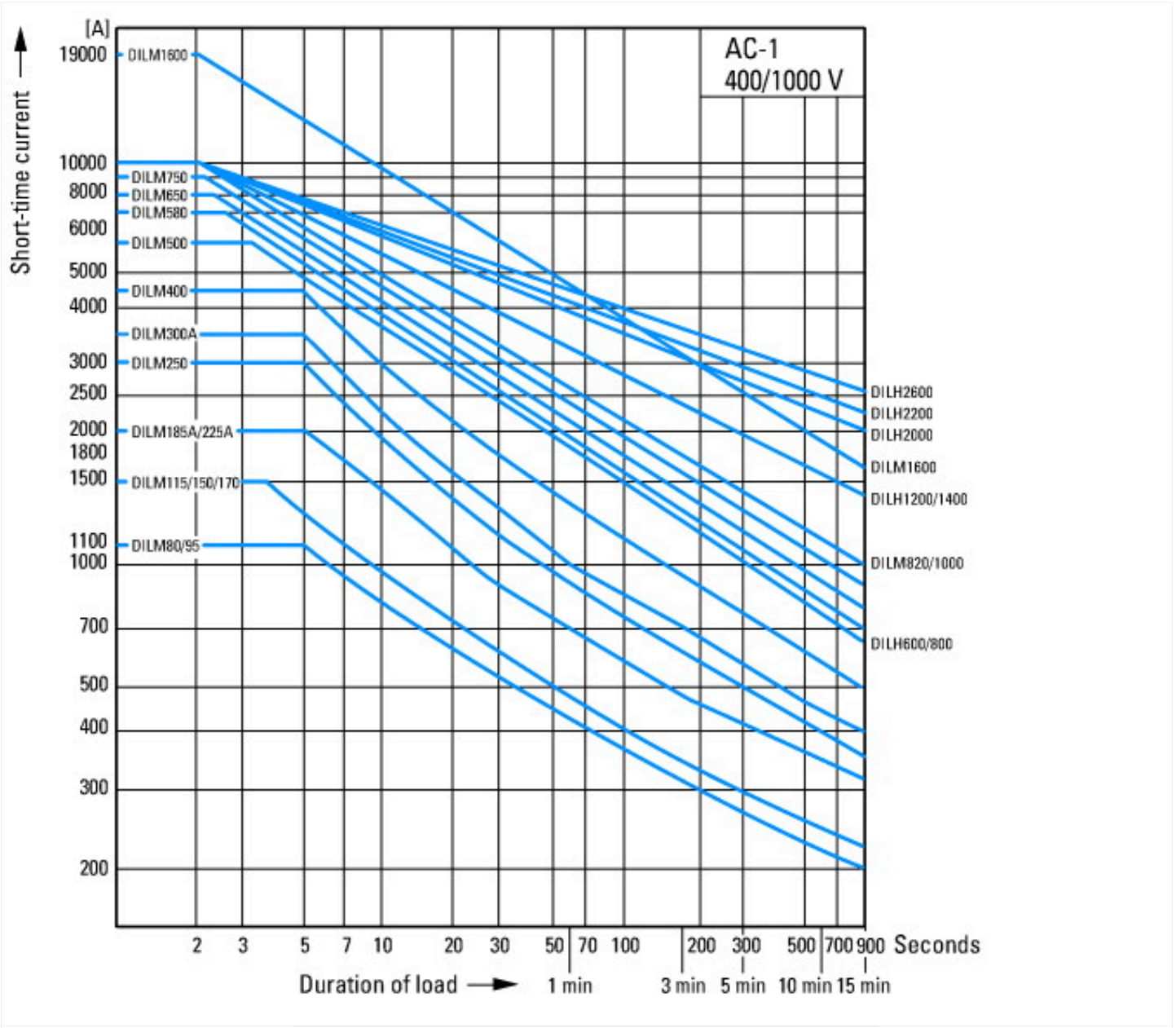

Short-time loading, 3-pole
Time interval between two loading cycles: 15 minutes

Dimensions

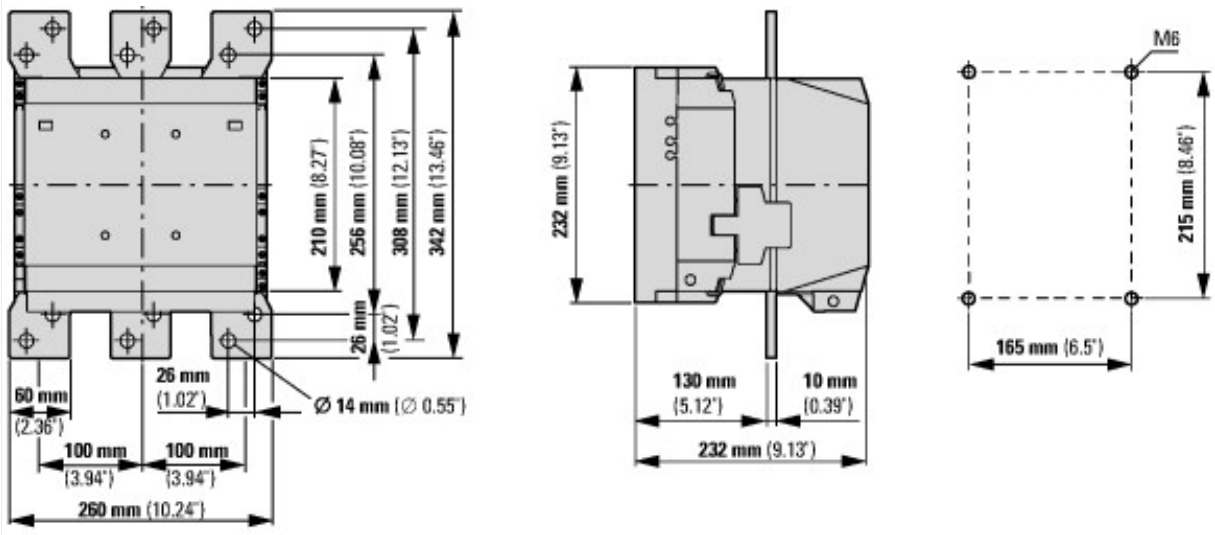

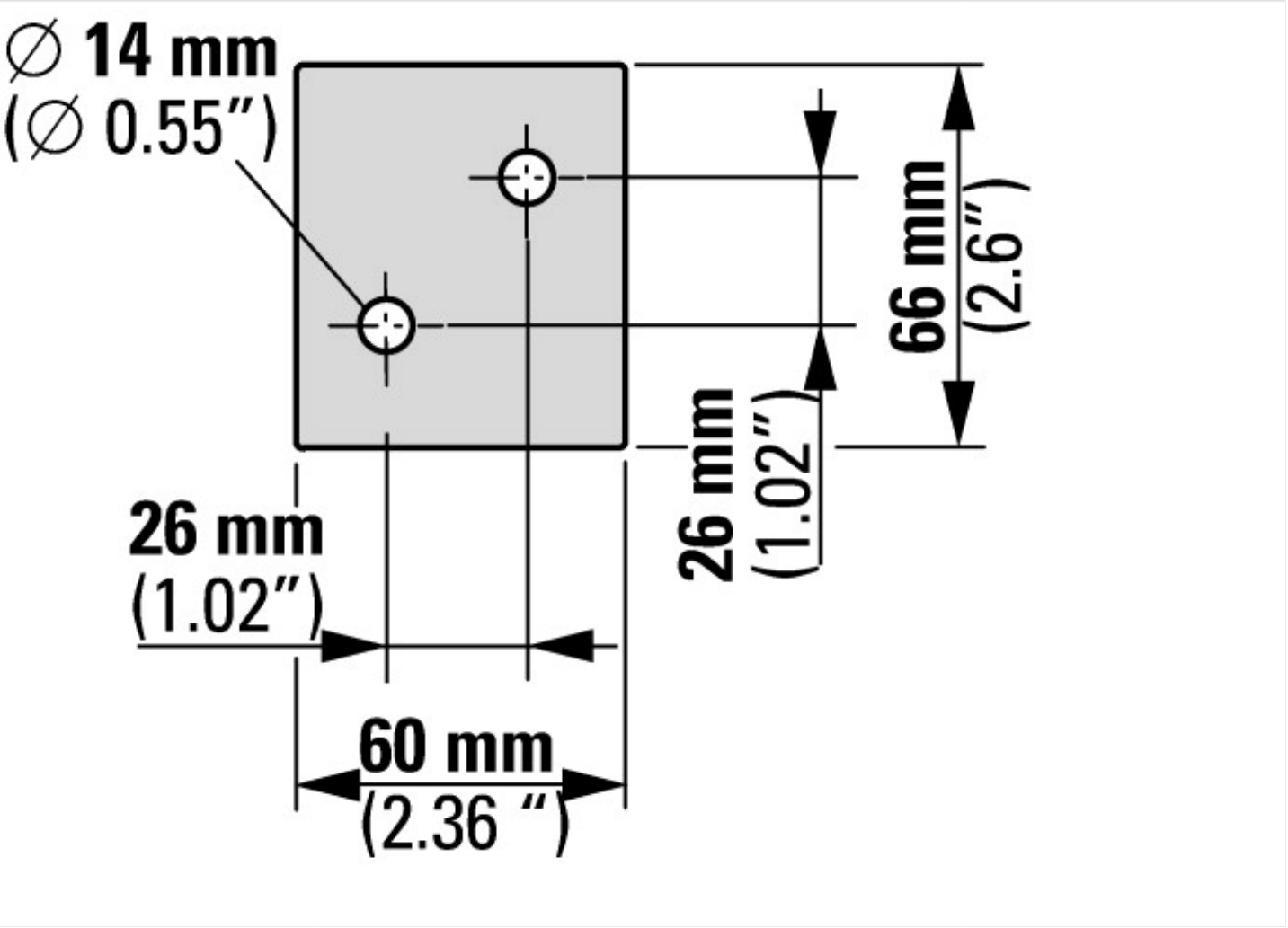

Additional product information (links)

IL034039ZU Contactors >170 A	
IL034039ZU Contactors >170 A	https://es-assets.eaton.com/DOCUMENTATION/AWA_INSTRUCTIONS/IL034039ZU2021_09.pdf
Motor starters and "Special Purpose Ratings" for the North American market	http://www.eaton.eu/ecm/groups/public/@pub/@europe/@electrical/documents/content/pct_3258146.pdf
Switchgear of Power Factor Correction Systems	http://www.moeller.net/binary/ver_techpapers/ver934en.pdf
X-Start - Modern Switching Installations Efficiently Fitted and Wired Securely	http://www.moeller.net/binary/ver_techpapers/ver938en.pdf
Mirror Contacts for Highly-Reliable Information Relating to Safety-Related Control Functions	http://www.moeller.net/binary/ver_techpapers/ver944en.pdf
Effect of the Cabel Capacitance of Long Control Cables on the Actuation of Contactors	http://www.moeller.net/binary/ver_techpapers/ver949en.pdf
Switchgear for Luminaires	http://www.moeller.net/binary/ver_techpapers/ver955en.pdf
Standard Compliant and Functionally Safe Engineering Design with Mechanical Auxiliary Contacts	http://www.moeller.net/binary/ver_techpapers/ver956en.pdf
The Interaction of Contactors with PLCs	http://www.moeller.net/binary/ver_techpapers/ver957en.pdf
Busbar Component Adapters for modern Industrial control panels	http://www.moeller.net/binary/ver_techpapers/ver960en.pdf

© 07/2022 by Eaton Industries GmbH