F07
Miniature general purpose filters



— Port size: G1/8 & G1/4
— Very compact unit
— Direct ported filters with high water removal efficiency

Technical features

Medium:
Compressed air only

Maximum inlet pressure:
10 bar (145 psi) Transparent bowl
17 bar (246 psi) Metal bowl

Filter element:
5 or 40 µm

Typical flow:
see below

Port sizes:
G1/8 or G1/4

Bowl volume:
31 ml

Drain: Manual or automatic

Ambient/Media temperature:
Transparent bowl
-34 ... +50°C (-29 ... +122°F)
Metal bowl
-34 ... +80°C (-29 ... +176°F)
Air supply must be dry enough to avoid ice formation at temperatures below +2°C (+35°F)

Materials:
Body: Zinc alloy
Bowl: Plastic or Zinc alloy
Filter element: Sintered PP
Elastomers: NBR

Technical data, standard model

Symbol	Port size	Filter element (µm)	Flow *1) (dm^3/s)	Drain	Bowl	Weight (kg)	Model
	G1/8	40	9	Manual	Plastic	0,13	F07-100-M3TG
	G1/4	40	11,5	Manual	Plastic	0,13	F07-200-M3TG
	G1/8	40	9	Automatic	Plastic	0,13	F07-100-A3TG
	G1/4	40	11,5	Automatic	Plastic	0,13	F07-200-A3TG

*1) Typical flow with 6,3 bar (91 psi) inlet pressure and a 0,3 bar (4,3 psi) droop from set.

Option selector

F07-★00-★★★★

Port size	Substitute
1/8"	1
1/4"	2
Drain	Substitute
Automatic	A
Manual	M

Thread form	Substitute
PTF	A
ISO G	G
Bowl	Substitute
Plastic	T
Metal	M
Filter element	Substitute
5 µm	1
40 µm	3

Flow characteristics Port size 1/4", filter element 40 µm

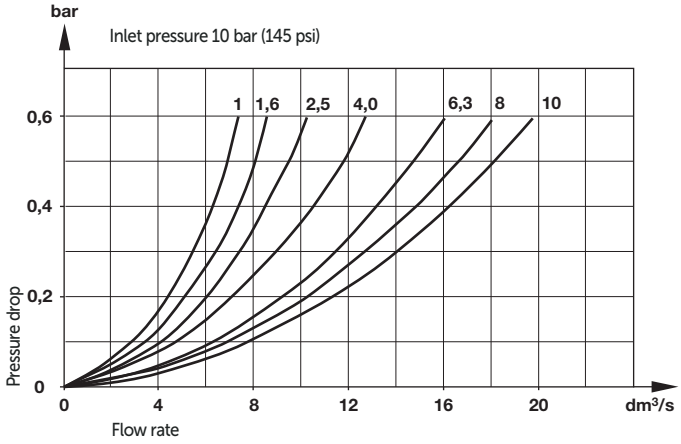

Our policy is one of continued research and development. We therefore reserve the right to amend, without notice, the specifications given in this document. (1997 - 8114e) © 2024 Norgren Ltd.

Accessories and sevice kit



Wall mounting bracket



1

5939-06

Sevice kit

	Service kit manual drain	Service kit automatic drain
		
5 µm:	F07-KITM05 (5 µm – black)	F07-KITA05 (5 µm – black)
40 µm:	F07-KITM40 (40 µm – green)	F07-KITA40 (40 µm – green)

Dimensions

Manual drain

Automatic drain

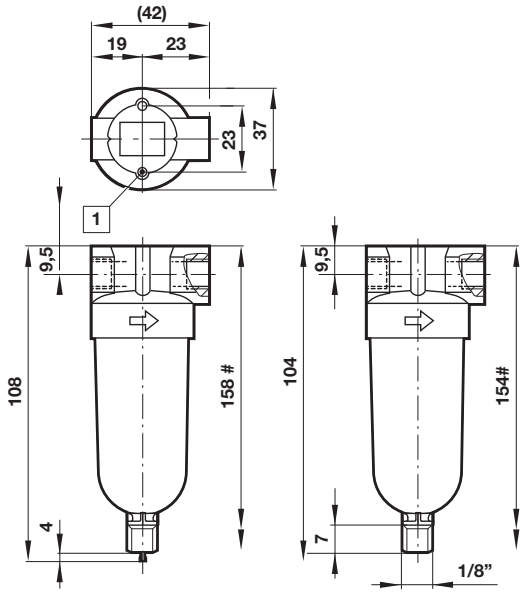

Minimum clearance required to remove bowl
1 Mounting holes, ø 4 mm, 13 mm deep

Wall mounting bracket

Dimensions in mm
Projection/First angle

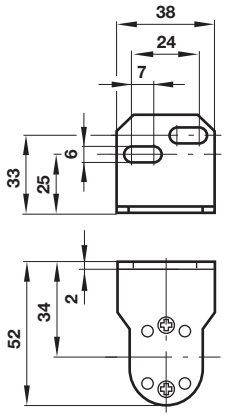

Use 1/8” (3 mm) screws
to mount bracket to wall.

Warning

These products are intended for use in industrial compressed air systems only. Do not use these products where pressures and temperatures can exceed those listed under **»Technical features/ data«.**
Before using these products with fluids other than those specified, for non-industrial applications, life-support systems or other applications not within published specifications,
consult Norgren Ltd.
Through misuse, age, or malfunction, components used in fluid power systems can fail in various modes.

The system designer is warned to consider the failure modes of all component parts used in fluid power systems and to provide adequate safeguards to prevent personal injury or damage to equipment in the event of such failure.
System designers must provide a warning to end users in the system instructional manual if protection against a failure mode cannot be adequately provided.
System designers and end users are cautioned to review specific warnings found in instruction sheets packed and shipped with these products.

Our policy is one of continued research and development. We therefore reserve the right to amend, without notice, the specifications given in this document. (1997 - 8114e) © 2024 Norgren Ltd.