THERMOMETRICS
A COMMITMENT TO EXCELLENCE

Type FL Low Profile NTC Temperature Sensor

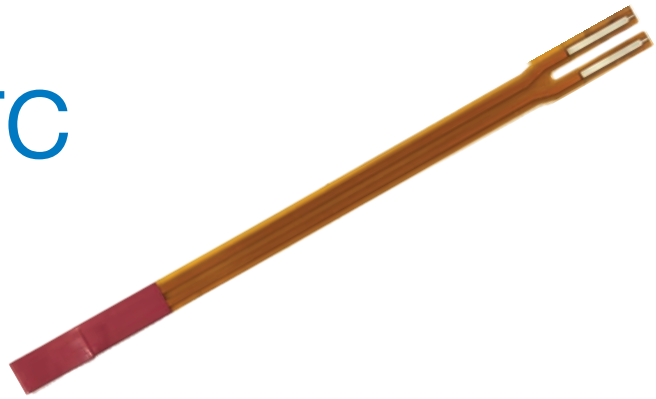

Thermometrics Type FL Low Profile NTC Temperature Sensor consists of an NTC chip thermistor enclosed in a flat flexible circuit (FFC) with a thin-film protective coating. With its low profile (1.0 mm max thickness) and contour-conforming flexibility, this sensor is ideal for tight applications.

Applications

- EV/HEV Battery Pack Temperature Sensing

Available Configurations	
Part Number	**Overall Length**
CTTS-203856-S02	61mm
CTTS-203856-F03	250mm
CTTS-203856-F04	500mm

Features

- Flexible PCB conforms to contours
- Low profile (1.0 mm max thickness)
- Low mass for fast response
- AEC-Q200 qualified
- RoHS compliant (Directive 2002/95/EC)

Amphenol
Advanced Sensors

Type FL - Specifications

Operating Temperature Range
-40°C to 80°C

Storage Temperature Range
-40°C to 80°C

R @ 25°C (77°F)
10KΩ (±3%)

B(25/85)°C
3936K (±1%)

Insulation Resistance
>100MΩ @ 1000VDC

Ordering Information
CTTS-203856-S02

Temp. °C	R / R25	R nominal ohm	R minimum ohm	R maximum ohm	Resistance Tolerance - %	Resistance Tolerance + %	Temp. Tolerance + °C	Temp. Tolerance - °C	Alpha %/°C	B nominal K
-40	29.97	299415	280726	319060	-6.2	6.6	1	-1	-6.32	3635
-30	16.24	162258	153065	171848	-5.7	5.9	1	-1	-5.94	3673
-20	9.13	91180	86511	96014	-5.1	5.3	0.9	-0.9	-5.59	3707
-10	5.30	52995	50555	55503	-4.6	4.7	0.9	-0.9	-5.27	3738
0	3.18	31780	30472	33114	-4.1	4.2	0.8	-0.8	-4.97	3767
10	1.96	19618	18902	20343	-3.7	3.7	0.8	-0.8	-4.69	3793
20	1.25	12440	12040	12841	-3.2	3.2	0.7	-0.7	-4.43	3817
30	0.81	8086.8	7827.6	8347.2	-3.2	3.2	0.8	-0.8	-4.19	3839
40	0.54	5379.6	5185.9	5575.4	-3.6	3.6	0.9	-0.9	-3.97	3859
50	0.37	3655.9	3510.8	3803.7	-4.0	4.0	1.1	-1.1	-3.76	3878
60	0.25	2534.4	2424.8	2646.5	-4.3	4.4	1.2	-1.2	-3.57	3896
70	0.18	1789.6	1706.3	1875.2	-4.7	4.8	1.4	-1.4	-3.39	3912
80	0.13	1285.5	1221.6	1351.5	-5.0	5.1	1.5	-1.6	-3.23	3927

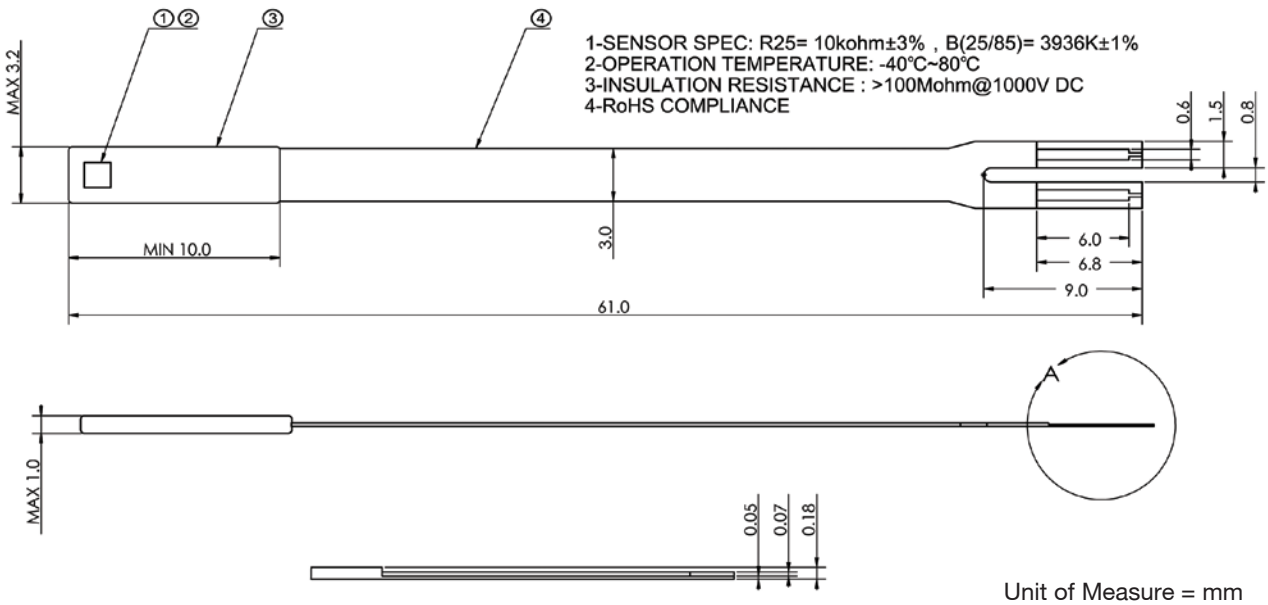

CTTS-203856-S02 Dimensions

Type FL - Mechanical Specifications

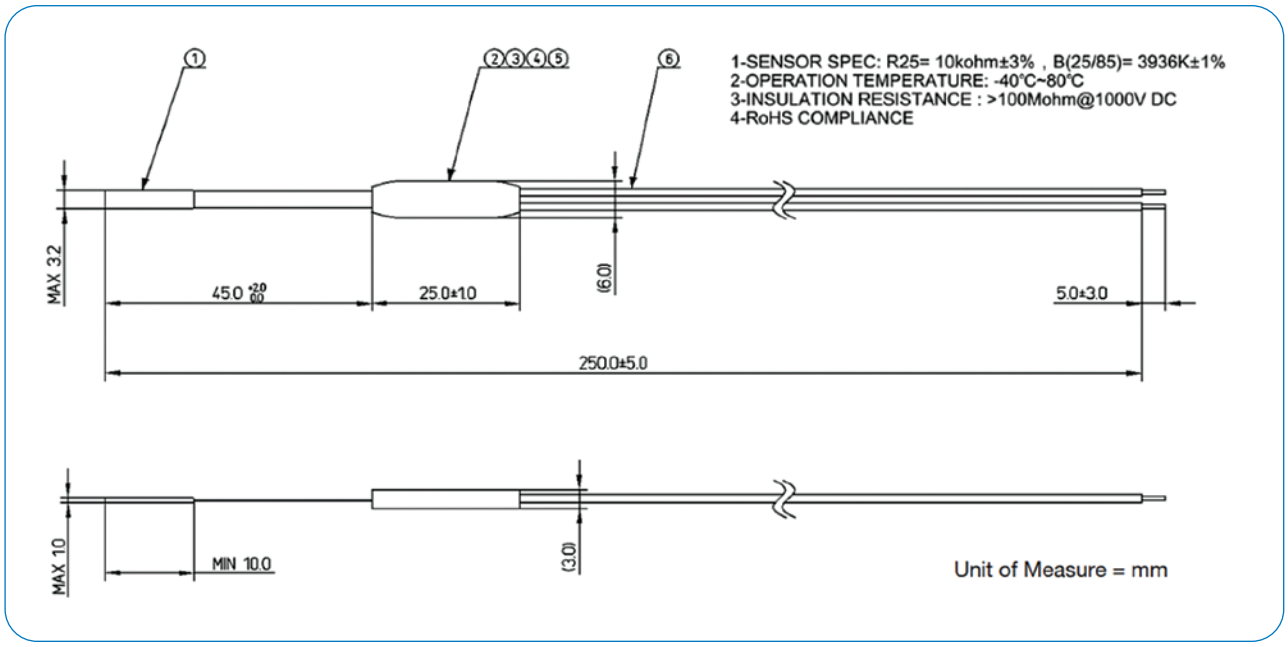

CTTS-203856-F03 Dimensions

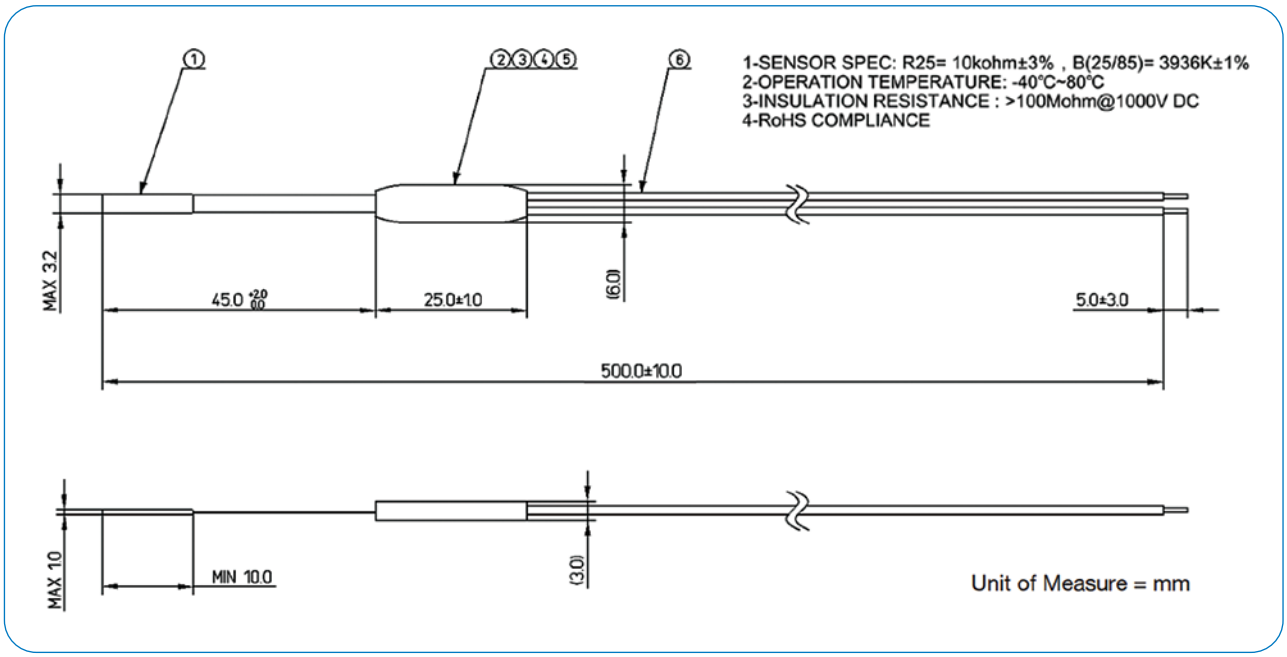

CTTS-203856-F04 Dimensions

Amphenol

Advanced Sensors

www.amphenol-sensors.com

© 2023 Amphenol Corporation. All Rights Reserved. Specifications are subject to change without notice.
Other company names and product names used in this document are the registered trademarks or trademarks of their respective owners.

AAS-920-754B - 10/23