




# Changeoverswitches, Contacts: 2, 20 A, front plate: HAND-0-AUTO, 45 °, maintained, flush mounting

**Part no.** T0-1-15431/E
**Article no.** 019872

Similar to illustration

## Delivery programme

| | | | |
|---|---|---|---|
| Product range | | | Control switches |
| Part group reference | | | T0 |
| Basic function | | | Changeoverswitches |
| | | | with black thumb grip and front plate |
| Contacts | | | 2 |
| Degree of Protection | | | Front IP65 |
| Design | | | flush mounting |
| | | | 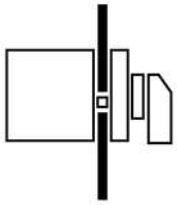 |
| Contact sequence | | | 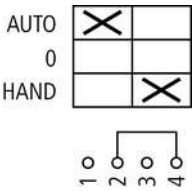 |
| Switching angle | | ° | 45 |
| Switching performance | | | maintained<br>With 0 (Off) position |
| Front plate no. | | |  |
| front plate | | | HAND-0-AUTO |
| **Motor rating AC-23A, 50 - 60 Hz** | | | |
| 400 V | P | kW | 5.5 |
| Rated uninterrupted current | $I_u$ | A | 20 |
| Number of contact units | | contact unit(s) | 1 |

## Technical data

### General

| | | | |
|---|---|---|---|
| Standards | | | IEC/EN 60947, VDE 0660, IEC/EN 60204, CSA, UL<br>Switch-disconnector according to IEC/EN 60947-3 |
| Climatic proofing | | | Damp heat, constant, to IEC 60068-2-78<br>Damp heat, cyclic, to IEC 60068-2-30 |
| Ambient temperature | | | |
| Open | | °C | -25 - +50 |
| Enclosed | | °C | -25 - +40 |
| Overvoltage category/pollution degree | | | III/3 |

| | | | |
|---|---|---|---|
| Rated impulse withstand voltage | $U_{imp}$ | V AC | 6000 |
| Mechanical shock resistance | | g | 15 |
| Mounting position | | | As required |
| Protection against direct contact when actuated from front (EN 50274) | | | Finger and back-of-hand proof |

## Contacts

| | | | |
|---|---|---|---|
| Electrical characteristics | | | |
| Rated operational voltage | $U_e$ | V AC | 690 |
| Rated uninterrupted current | $I_u$ | A | 20 |
| Note on rated uninterrupted current $!_u$ | | | Rated uninterrupted current Iu is specified for max. cross-section. |
| Load rating with intermittent operation, class 12 | | | |
| AB 25 % DF | | x $I_e$ | 2 |
| AB 40 % DF | | x $I_e$ | 1.6 |
| AB 60 % DF | | x $I_e$ | 1.3 |
| Short-circuit rating | | | |
| Fuse | | A gG/gL | 20 |
| Rated short-time withstand current (1 s current) | $I_{cw}$ | $A_{rms}$ | 320 |
| Note on rated short-time withstand current Icw | | | Current for a time of 1 second |
| Rated conditional short-circuit current | Iq | kA | 6 |

## Switching capacity

| | | | |
|---|---|---|---|
| cos φ rated making capacity as per IEC 60947-3 | | A | 130 |
| Rated breaking capacity cos φ to IEC 60947-3 | | A | |
| 230 V | | A | 100 |
| 400/415 V | | A | 110 |
| 500 V | | A | 80 |
| 690 V | | A | 60 |
| Safe isolation to EN 61140 | | | |
| between the contacts | | V AC | 440 |
| Current heat loss per contact at $I_e$ | | W | 0.6 |
| Current heat loss per auxiliary circuit at $I_e$ (AC-15/230 V) | | CO | 0.6 |
| Lifespan, mechanical | Operations | x $10^6$ | > 0.4 |
| Maximum operating frequency | Operations/h | | 1200 |
| AC | | | |
| AC-3 | | | |
| Rating, motor load switch | P | kW | |
| 220 V 230 V | P | kW | 3 |
| 230 V Star-delta | P | kW | 5.5 |
| 400 V 415 V | P | kW | 5.5 |
| 400 V Star-delta | P | kW | 7.5 |
| 500 V | P | kW | 5.5 |
| 500 V Star-delta | P | kW | 7.5 |
| 690 V | P | kW | 4 |
| 690 V Star-delta | P | kW | 5.5 |
| Rated operational current motor load switch | | | |
| 230 V | $I_e$ | A | 11.5 |
| 230 V star-delta | $I_e$ | A | 20 |
| 400V 415 V | $I_e$ | A | 11.5 |
| 400 V star-delta | $I_e$ | A | 20 |
| 500 V | $I_e$ | A | 9 |
| 500 V star-delta | $I_e$ | A | 15.6 |
| 690 V | $I_e$ | A | 4.9 |
| 690 V star-delta | $I_e$ | A | 8.5 |
| AC-21A | | | |
| Rated operational current switch | | | |
| 440 V | $I_e$ | A | 20 |

| | | | |
|---|---|---|---|
| AC-23A | | | |
| Motor rating AC-23A, 50 - 60 Hz | P | kW | |
| 230 V | P | kW | 3 |
| 400 V 415 V | P | kW | 5.5 |
| 500 V | P | kW | 7.5 |
| 690 V | P | kW | 5.5 |
| Rated operational current motor load switch | | | |
| 230 V | $I_e$ | A | 13.3 |
| 400 V 415 V | $I_e$ | A | 13.3 |
| 500 V | $I_e$ | A | 13.3 |
| 690 V | $I_e$ | A | 7.6 |
| DC | | | |
| DC-1, Load-break switches L/R = 1 ms | | | |
| Rated operational current | $I_e$ | A | 10 |
| Voltage per contact pair in series | | V | 60 |
| DC-21A | $I_e$ | A | |
| Rated operational current | $I_e$ | A | 1 |
| Contacts | | Quantity | 1 |
| DC-23A, motor load switch L/R = 15 ms | | | |
| 24 V | | | |
| Rated operational current | $I_e$ | A | 10 |
| Contacts | | Quantity | 1 |
| 48 V | | | |
| Rated operational current | $I_e$ | A | 10 |
| Contacts | | Quantity | 2 |
| 60 V | | | |
| Rated operational current | $I_e$ | A | 10 |
| Contacts | | Quantity | 3 |
| 120 V | | | |
| Rated operational current | $I_e$ | A | 5 |
| Contacts | | Quantity | 3 |
| 240 V | | | |
| Rated operational current | $I_e$ | A | 5 |
| Contacts | | Quantity | 5 |
| DC-13, Control switches L/R = 50 ms | | | |
| Rated operational current | $I_e$ | A | 10 |
| Voltage per contact pair in series | | V | 32 |
| Control circuit reliability at 24 V DC, 10 mA | Fault probability | $H_F$ | $< 10^{-5}$, < 1 fault in 100000 operations |

## Terminal capacities

| | | | |
|---|---|---|---|
| Solid or stranded | | $mm^2$ | 1 x (1 - 2,5)<br>2 x (1 - 2,5) |
| Flexible with ferrules to DIN 46228 | | $mm^2$ | 1 x (0.75 - 2.5)<br>2 x (0.75 - 2.5) |
| Terminal screw | | | M3.5 |
| Max. tightening torque | | Nm | 1 |

## Technical safety parameters:

| | | | |
|---|---|---|---|
| **Notes** | | | $B10_d$ values as per EN ISO 13849-1, table C1 |

## Approbierte Leistungsdaten

| | | | |
|---|---|---|---|
| Terminal capacity | | | |
| Terminal screw | | | M3.5 |
| Tightening torque | | lb-in | 8.83 |

# Design verification as per IEC/EN 61439

| | | | |
|---|---|---|---|
| Technical data for design verification | | | |
| Rated operational current for specified heat dissipation | $I_n$ | A | 20 |

| | | | |
|---|---|---|---|
| Heat dissipation per pole, current-dependent | $P_{vid}$ | W | 0.6 |
| Equipment heat dissipation, current-dependent | $P_{vid}$ | W | 0 |
| Static heat dissipation, non-current-dependent | $P_{vs}$ | W | 0 |
| Heat dissipation capacity | $P_{diss}$ | W | 0 |
| Operating ambient temperature min. | | °C | -25 |
| Operating ambient temperature max. | | °C | 50 |
| IEC/EN 61439 design verification | | | |
| 10.2 Strength of materials and parts | | | |
| 10.2.2 Corrosion resistance | | | Meets the product standard's requirements. |
| 10.2.3.1 Verification of thermal stability of enclosures | | | Meets the product standard's requirements. |
| 10.2.3.2 Verification of resistance of insulating materials to normal heat | | | Meets the product standard's requirements. |
| 10.2.3.3 Verification of resistance of insulating materials to abnormal heat and fire due to internal electric effects | | | Meets the product standard's requirements. |
| 10.2.4 Resistance to ultra-violet (UV) radiation | | | Please enquire |
| 10.2.5 Lifting | | | Does not apply, since the entire switchgear needs to be evaluated. |
| 10.2.6 Mechanical impact | | | Does not apply, since the entire switchgear needs to be evaluated. |
| 10.2.7 Inscriptions | | | Meets the product standard's requirements. |
| 10.3 Degree of protection of ASSEMBLIES | | | Does not apply, since the entire switchgear needs to be evaluated. |
| 10.4 Clearances and creepage distances | | | Meets the product standard's requirements. |
| 10.5 Protection against electric shock | | | Does not apply, since the entire switchgear needs to be evaluated. |
| 10.6 Incorporation of switching devices and components | | | Does not apply, since the entire switchgear needs to be evaluated. |
| 10.7 Internal electrical circuits and connections | | | Is the panel builder's responsibility. |
| 10.8 Connections for external conductors | | | Is the panel builder's responsibility. |
| 10.9 Insulation properties | | | |
| 10.9.2 Power-frequency electric strength | | | Is the panel builder's responsibility. |
| 10.9.3 Impulse withstand voltage | | | Is the panel builder's responsibility. |
| 10.9.4 Testing of enclosures made of insulating material | | | Is the panel builder's responsibility. |
| 10.10 Temperature rise | | | The panel builder is responsible for the temperature rise calculation. Eaton will provide heat dissipation data for the devices. |
| 10.11 Short-circuit rating | | | Is the panel builder's responsibility. The specifications for the switchgear must be observed. |
| 10.12 Electromagnetic compatibility | | | Is the panel builder's responsibility. The specifications for the switchgear must be observed. |
| 10.13 Mechanical function | | | The device meets the requirements, provided the information in the instruction leaflet (IL) is observed. |

## Technical data ETIM 6.0

| | | | |
|---|---|---|---|
| Low-voltage industrial components (EG000017) / Control switch (EC002611) | | | |
| Electric engineering, automation, process control engineering / Low-voltage switch technology / Off-load switch, circuit breaker, control switch / Control switch (ecl@ss8.1-27-37-14-14 [ACN998008]) | | | |
| Type of switch | | | Reverser |
| Number of poles | | | 1 |
| Max. rated operation voltage Ue AC | | V | 690 |
| Rated permanent current Iu | | A | 20 |
| Number of switch positions | | | 3 |
| With 0 (off) position | | | Yes |
| With retraction in 0-position | | | No |
| Device construction | | | Built-in device |
| Width in number of modular spacings | | | 0 |
| Suitable for ground mounting | | | No |
| Suitable for front mounting 4-hole | | | Yes |
| Suitable for distribution board installation | | | No |
| Suitable for intermediate mounting | | | No |
| Complete device in housing | | | No |
| Type of control element | | | Toggle |
| Front shield size | | | 48x48 mm |
| Degree of protection (IP), front side | | | IP65 |

## Approvals

| | |
|---|---|
| | UL 508; CSA-C22.2 No. 14-05; CSA-C22.2 No. 94; IEC/EN 60947-3; CE marking |
| | E36332 |
| | NLRV |
| | 12528 |
| | 3211-05 |
| | UL listed, CSA certified |
| | Yes, in combination with "+NA" (105864) |
| | IEC: IP65; UL/CSA Type 1, 12 |

## Dimensions

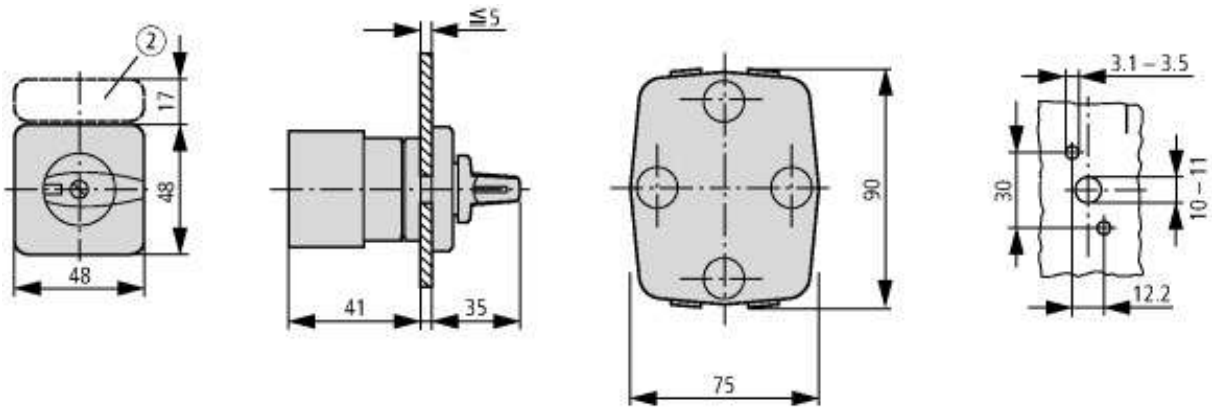


2 ZFS-... Label mount not included as standard

## Additional product information (links)

| **IL03801020Z (AWA1150-0586) Cam switch: Mounting** | |
|---|---|
| IL03801020Z (AWA1150-0586) Cam switch: Mounting | ftp://ftp.moeller.net/DOCUMENTATION/AWA_INSTRUCTIONS/IL03801020Z2015_08.pdf |
| Form for ordering non-standard front plates | http://ecat.moeller.net/flip-cat/?edition=HPLEN&startpage=4.87 |
| Display flip catalog page. | http://ecat.moeller.net/flip-cat/?edition=K115A&startpage=108 |
| Technical overview cam switch, switch-disconnector | http://de.ecat.moeller.net/flip-cat/?edition=HPLTEv1&startpage=4.2 |
| System overview cam switch T | http://de.ecat.moeller.net/flip-cat/?edition=HPLTEv1&startpage=4.4 |
| System overview switch-disconnector P | http://de.ecat.moeller.net/flip-cat/?edition=HPLTEv1&startpage=4.6 |
| Key to part numbers Cam switch | http://de.ecat.moeller.net/flip-cat/?edition=HPLTEv1&startpage=4.8 |
| Key to part numbers Switch-disconnector | http://de.ecat.moeller.net/flip-cat/?edition=HPLTEv1&startpage=4.8 |
| Switches for ATEX | http://www.coopercrouse-hinds.eu/en/products/25-ex-safety-and-main-current-switches.html |
| UL/CSA: Rating data for approved types | http://ecat.moeller.net/flip-cat/?edition=HPLTF&startpage=4.98 |



© 03/2016 by Eaton Industries GmbH