LUMEL
EVERYTHING COUNTS



NR30 - RAIL MOUNTED POWER NETWORK METER
NR30IoT- RAIL MOUNTED POWER NETWORK METER FOR **IoT** APPLICATIONS

- **Measurement of 54** power network parameters and **current and voltage harmonics up to 63rd**, in 1-phase 2-wire or 3-phase 3 or 4-wire balanced and unbalanced systems.
- **The MQTT protocol is ideal for communication in distributed acquisition systems data - IoT applications (NR30IoT).**
- **High accuracy class (0.2S for active energy).**
- Backlit LCD screen **fully configurable by a user** (22 views, 3 parameters in each).
- For direct (up to 63A) and indirect measurement (x/1A or x/5A).
- Indications considering values of programmed ratios.
- Memory of minimum and maximum values.
- 2 configurable alarm outputs.
- Optional: with an additional module of analog outputs S4AO (max. 4 current or voltage outputs).
- Digital output RS-485 - MODBUS protocol.
- Archiving of up to 32 measured parameters in the internal memory 8 GB.
- **Modern and user-friendly Ethernet interface** 10/100 BASE-T:
  - protocol: MODBUS TCP/iP, HTTP, FTP,
  - protocol: MQTT **(NR30IoT),**
  - services: www server, ftp server, DHCP client.
- Programming of parameters **through USB** using **free eCon software.**
- Battery backup RTC.
- Modular housing for S-rail according to EN 62208 (the meter has a width of 6 modules).

Electrical Safety CAT III

CE

NEW FUNCTIONS

- **Supervisory relay mode for alarm outputs (NR30 and NR30IoT)**
- **MQTT protocol (for NR30)**

Remark:
- To make functions active, order appropriate licence key – details in ordering code.

EXAMPLE OF APPLICATION

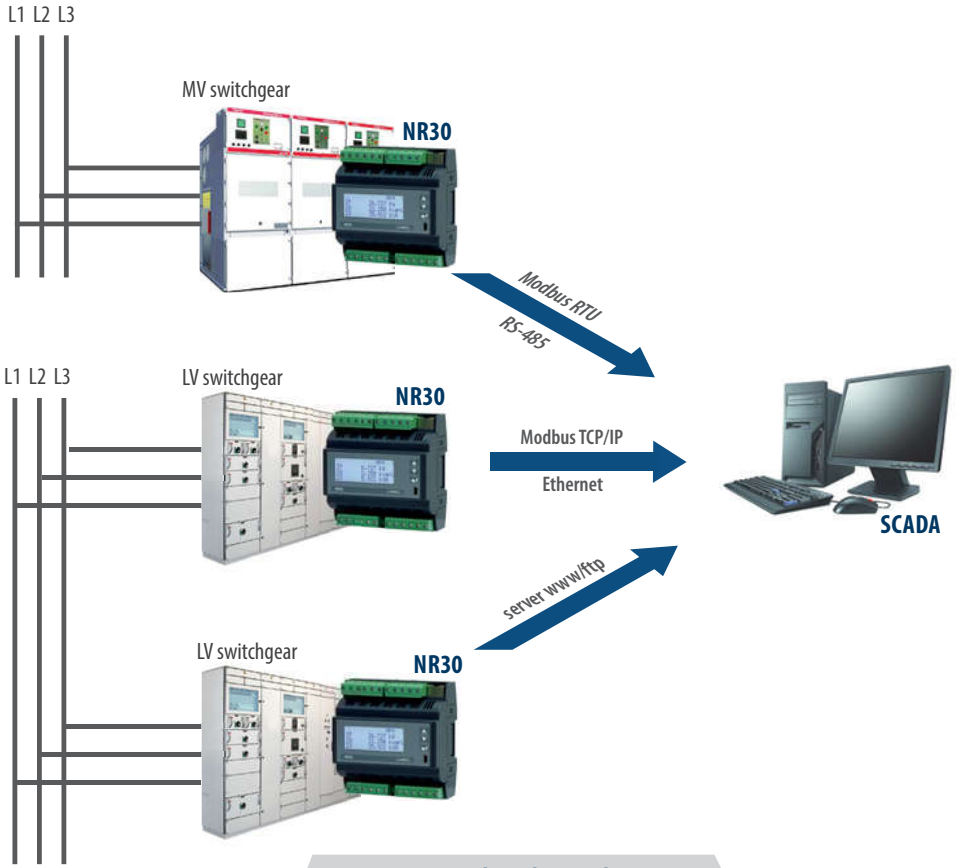

EXAMPLE OF APPLICATION

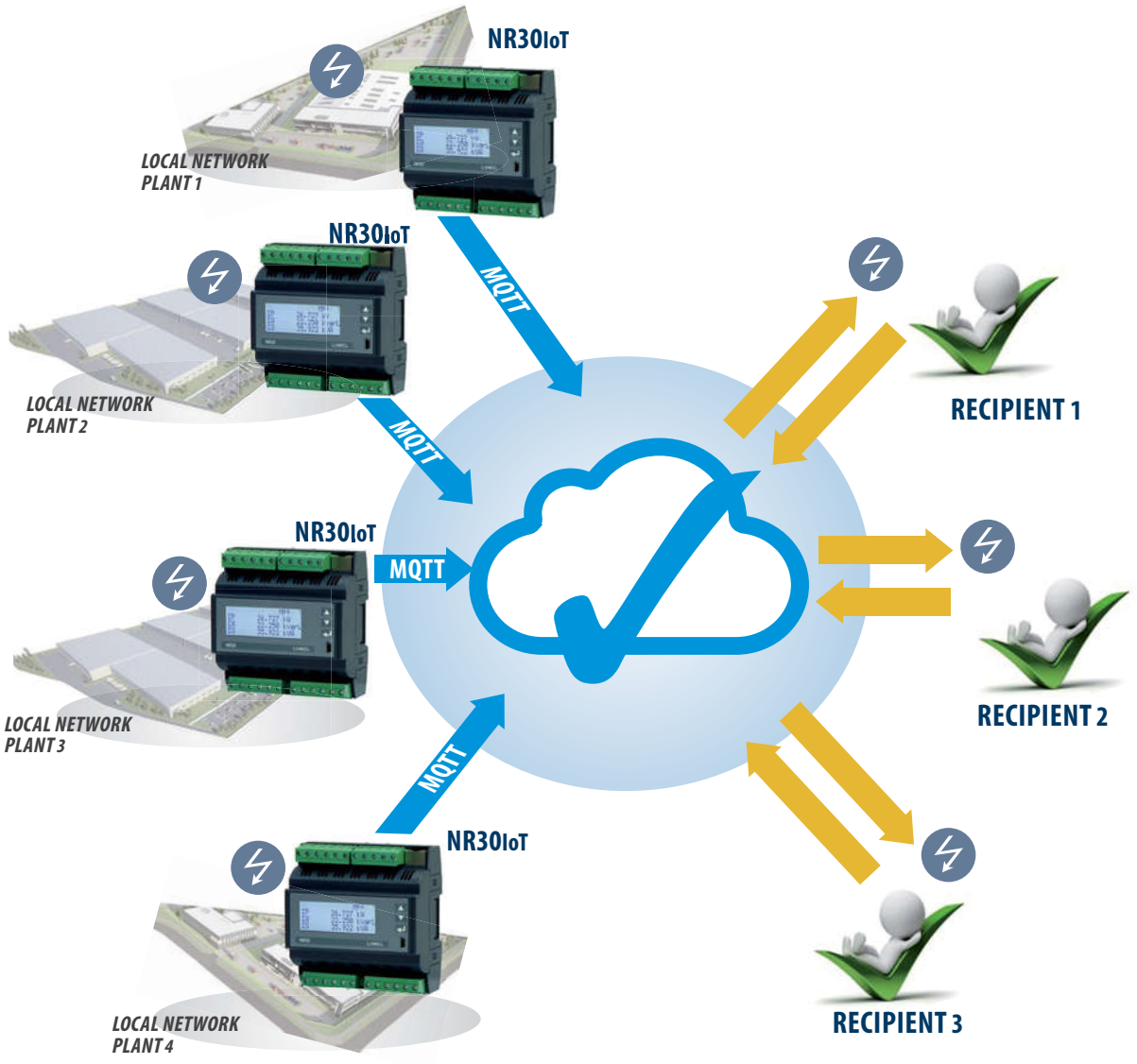

MEASUREMENT AND VISUALIZATION OF POWER NETWORK PARAMETERS

- phase voltages: U_1, U_2, U_3
- phase-to-phase voltages: U_{12}, U_{23}, U_{31}
- phase currents I_1, I_2, I_3
- active phase powers: P_1, P_2, P_3
- reactive phase powers: Q_1, Q_2, Q_3
- apparent phase powers: S_1, S_2, S_3
- active power factors: PF_1, PF_2, PF_3
- reactive/active power factors: $tg\varphi_1$, $tg\varphi_2$, $tg\varphi_3$
- active, reactive and apparent 3-phase power: P, Q, S
- mean 3-phase power factors: PF, $tg\varphi$
- frequency f
- mean 3-phase voltage: U_S
- mean phase-to-phase voltage: U_{mf}
- mean 3-phase current: I_S
- 15, 30, 60 minutes' mean active power: P_{demand}
- mean apparent power S_{demand}
- average current I_{demand}
- active, reactive and apparent 3-phase energy: EnP, EnQ, EnS
- active, reactive and apparent energy from external counter: EnPE
- total harmonic content coefficients for phase voltages and currents THD_{U1}, THD_{U2}, THD_{U3}, THD_{I1}, THD_{I2}, THD_{I3} and for 3-phase voltages and currents THD_U, THD_I
- harmonics for current and phase voltage up to 63rd!

NR30, NR30IoT - RAIL MOUNTED POWER NETWORK METER

LUMEL
EVERYTHING COUNTS

FEATURES

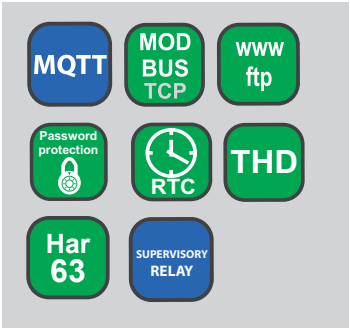

INPUTS



OUTPUTS

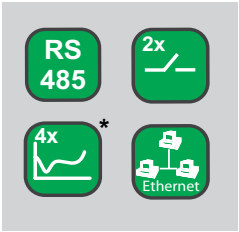

* -available only with an additional S4A0 module

GALVANIC ISOLATION

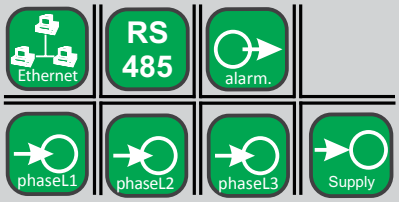

TECHNICAL DATA

MEASURING RANGES

Measured value	Measuring range	L1	L2	L3	Σ	Class
Current 1/5 A 1 A~ 5 A~	0.010 ..0.100..1.200 A (tr_I=1) 0.050 ..0.500.. 6.000 A (tr_I=1) ...20.00 kA (tr_I≠1)	•	•	•		0.2 (EN 61557-12)
Voltage L-N 57.7 V~ 230 V~ 400 V~	5.7..11.5 ..70.0 V (tr_U=1) 23.0..46 .. 276.0 V (tr_U=1) 40.0..80 .. 480.0 V (tr_U=1) ...480.0 kV (tr_U≠1)	•	•	•		0.2 (EN 61557-12)
Voltage L-L 100 V~ 400 V~ 690 V~	10.0 ..20..120.0 V (tr_U=1) 40.0..80 .. 480.0 V (tr_U=1) 69.0..138 .. 830.0 V (tr_U=1) ...830.0 kV (tr_U≠1)	•	•	•		0.5 (EN 61557-12)
Active power P_i, average active power P_{dt}	.. (-)1999.9 W ..(-)1999.9 MW (tr_U≠1.tr_I≠1)	•	•	•	•	0.5 (EN 61557-12)
Reactive power Q_i	.. (-)1999.9 Var ..(-)1999.9 MVar (tr_U≠1.tr_I≠1)	•	•	•	•	1 (EN 61557-12)
Apparent power S_i, avarage apparent power S_{dt}	..1999.9 VA ..1999.9 MVA (tr_U≠1.tr_I≠1)	•	•	•	•	0.5 (EN 61557-12)
Active energy EnP (imported or exported)	.. (-)1999.9 Wh ..(-)1999.9 MWh (tr_U≠1.tr_I≠1)				•	**0.2S (EN 62053-22)**
Reactive energy EnQ (inductive or capacitive)	.. (-)1999.9 Varh ..(-)1999.9 MVarh (tr_U≠1.tr_I≠1)				•	1 (EN 61557-12)
Apparent energy EnS	.. 1999.9 VAh ..1999.9 MVAh (tr_U≠1.tr_I≠1)				•	0.5 (EN 61557-12)
Active power factor PF_i	-1.00 ..0 ..1.00	•	•	•	•	1 (EN 61557-12)
Coefficient tg	-999,99 .. 0 .. 999,99	•	•	•	•	1
Frequency f	45.00..65.00 Hz				•	0.1 (EN 61557-12)
Total harmonic distortion of voltage THDU and current THDI	0.0 ..100.0 %	•	•	•	•	5 (EN 61557-12)
Amplitudes of the voltage U_{h2} ...U_{h63}, and current I_{h2} ... I_{h63}	0.0 ..100.0 %	•	•	•		II (IEC61000-4-7)

tr_I - Ratio of current transformer = Primary current of transformer / Secondary current of current transformer,
tr_U - Ratio of voltage transformer = Primary voltage of transformer / Secondary voltage of voltage transformer,

OUTPUTS

Output type	Properties
Relay output	2 x programmable relays, non-voltage contacts, load capacity 0.5 A / 250 V a.c. or 5 A / 30 V d.c.

DIGITAL INTERFACE

Interface type	Transmission protocol		Remarks
USB 1.1/2.0	Modbus RTU 8N2		baud rate115.2 kbit/s; firmware update
RS-485	Modbus RTU 8N2, 8E1, 8O1, 8N1	Address 1..247	baud rate: 4.8, 9.6, 19.2 38.4, 57.6, 115.2 kbit/s
Ethernet 10/100 Base-T	Modbus TCP, HTTP, FTP		WWW server, FTP server, DHCP client
	MQTT (NR30IoT)		

EXTERNAL FEATURES

Readout field	20 x 4 lines LCD character display; white background, black characters	
Overall dimensions	105 x 110 x 60 mm	
Weight	0.3 kg	
Protection grade	from frontal side: IP50	from terminal side: IP00

RATED OPERATING CONDITIONS

Supply voltage	⇾○ 85...253 V a.c. (40...50...400 Hz), 90...300 V d.c. or 20...40 V a.c., 20...60 V d.c.	power consumption ≤ 6 VA
Power consumption	in voltage circuit ≤ 0.5 VA	in current circuit ≤ 0.1 VA (In = 1/5 A); ≤ 2.0 VA (In = 63 A)
Input signal	0...0,1...1,2 In; 0,1...0,2...1,2 Un for current, voltage, PF_i, $tg\varphi_i$	frequency 45...50...60...65 Hz, sinusoidal (THD ≤ 8%)
Power factor	-1...0...1	
Preheating time	5 min.	
Ambient temperature	-10...23...55°C, class K55 acc. to EN61557-12	
Humidity	0...40...65...95%	inadmissible condensation
Operating position	any	
External magnetic field	≤ 40...400 A/m d.c.	≤ 3 A/m a.c. 50/60 Hz
Short-term overload	voltage input: 2 Un (5 sec.)	current input: 50 A for In = 1A/5A (1 sec.) 630 A for In = 63A (1 sec.)
Admissible crest factor	current: 2	voltage: 2
Additional error (in % of the intrinsic error)		from ambient temperature change: < 50% / 10°C

SAFETY AND COMPABILITY REQUIREMENTS

Electromagnetic compatibility	noise immunity	acc. to EN 61000-6-2
	noise emissions	acc. to EN 61000-6-4
Isolation insured by the casing	double	acc. to EN 61010-1
Isolation between circuits	basic	acc. to EN 61010-1
Polution level	2	acc. to EN 61010-1
Installation category	III	acc. to EN 61010-1
Maximal phase-to-earth voltage	• for supply circuit and relay outputs 300 V • for measuring input 500 V • for circuits of RS-485, analog outputs: 50 V	acc. to EN 61010-1
Altitude a.s.l.	< 2000 m	

CONNECTION DIAGRAMS

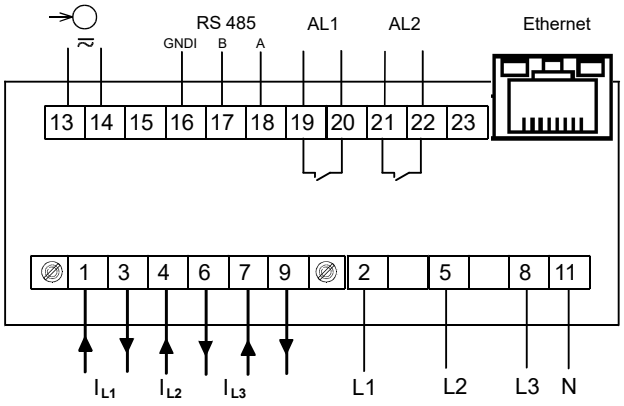

Description of connection strips in the execution of the meter for indirect connections

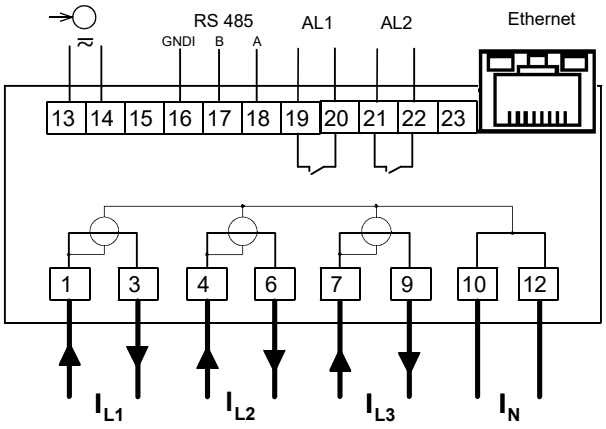

Description of connection strips in the execution of the meter for direct connections 63A

NR30, NR30IoT - RAIL MOUNTED POWER NETWORK METER

DISPLAING OF MEASUREMENT PARAMETERS

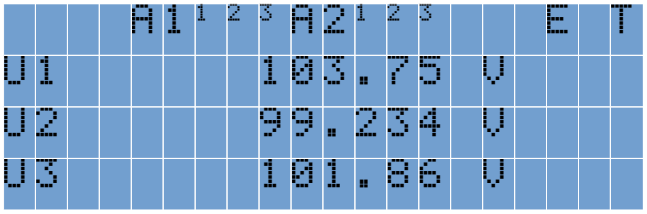

up to 22 programmable screens
(3 parameters per page)

easy to use and intuitive menu;
information bar with status of:
min.max values, phase sequence,
alarm outputs, archiving status,
Ethernet and RS-485 interfaces

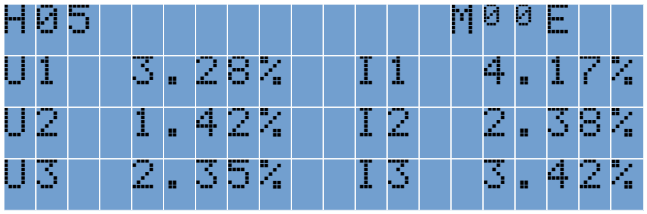

one screen dedicated to harmonics;
indication of individual harmonic
for voltages and currents (up to 63rd)

METER CONFIGURATION WITH FREE **eCON** SOFTWARE

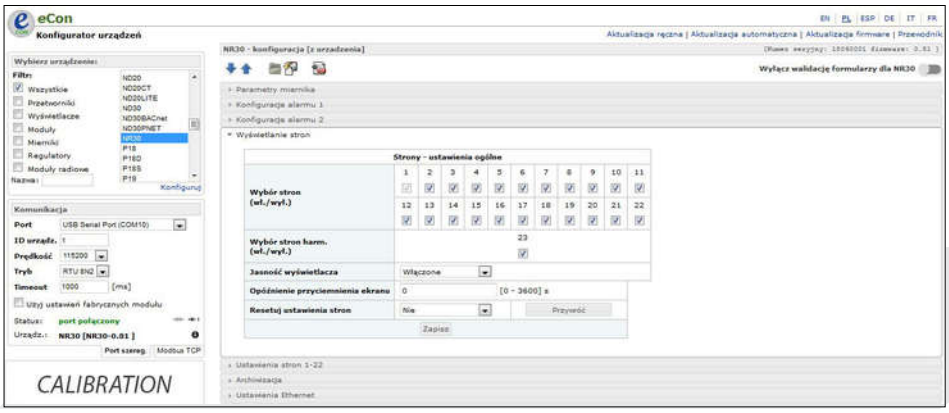

ability to configure and update*
NR30/NR30IoT with free **eCon** software
(via RS-485, USB or Ethernet interface)

*- update only via USB port

REMOTE READOUT OF PARAMETERS THROUG ETHERNET: **WWW, FTP** SERVER

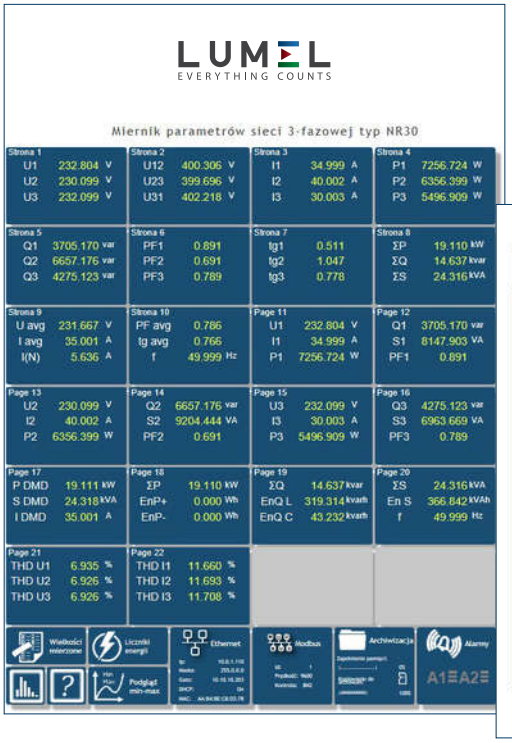



WEB server for remote reading
of current measurement data;
FTP server for downloading
archived CSV files

NR30, NR30IoT - RAIL MOUNTED POWER NETWORK METER

ORDERING CODE

Meter NR30	X	X	X	X	XX	X	X
Input current In:							
1/5 A (X/1 ; X/5)	1						
63 A	2						
Input voltage (phase/phase-to-phase) Un:							
3 x 57.7/ 100 V up to 3 x 100/ 170 V		1					
3 x 230/ 400 V up to 3 x 400/ 690 V		2					
Interface:							
RS-485 and Ethernet			2				
Supply:							
85...253 V a.c., 90...300 V d.c.				1			
20...40 V a.c., 20...60 V d.c.				2			
Version:							
standard					00		
with S4AO*: 4 current outputs 0/4 .. 20 mA					01		
with S4AO*: 4 voltage outputs 0 .. 10 V					02		
with S4AO*: 4 outputs (2 groups 1 x 0..10 V + 1 x 0/4 .. 20 mA)					03		
supervisory relay					SR		
custom-made**					XX		
Language:							
Polish/ English						M	
other**						X	
Acceptance tests:							
without additional quality requirements							0
with an extra quality inspection certificate							1
with calibration certificate							2
acc.to customer's request							X

ORDERING WAY OF ADDITIONAL FUNCTIONS (SUPERVISORY RELAY, MQTT PROTOCOL)

Ordering code	Description of the license key
LKEY WXNR30MQ	activation of the MQTT protocol in NR30
LKEY WXNR30SR	activation of the supervisory relay function in NR30
LKEY WXNR30MS	activation of the MQTT protocol and the supervisory relay function in NR30

Important: When ordering, please provide the meter's execution code and serial number NR30. It is placed on the meter's nominal plate, in the configuration menu in the Information mode or on the bar in the eCon program.

Order example:

The code: **NR30 112100M0** means:

NR30 - NR30 meter
1 – input current 1/5 A (X/1; X/5)
1 – input voltage 3x57.7/100 V up to 3x100/170 V,
2 – RS485 and Ethernet,
1 – supply 85..253 V a.c., 90..300 V d.c.
00 – standard version,
M – polish/english language version
0 – without additional quality requirements.

* 4-channel S4AO analog output module will be made in eglish version with the same power supply as the ordered NR30 meter, unless the customer specifies otherwise. The S4AO module communicates with the NR30 meter via the RS485 Modbus Master interface, therefore cooperation with S4AO excludes the use the NR30 meter RS485 interface for communication with another Master.

**after agreement with the manufacturer

Meter NR30IoT	X	X	X	X	XX	X	X
Input current In:							
1/5 A (X/1 ; X/5)	1						
63 A	2						
Input voltage (phase/phase-to-phase) Un:							
3 x 57.7/ 100 V up to 3 x 100/ 170 V		1					
3 x 230/ 400 V up to 3 x 400/ 690 V		2					
Interface:							
RS-485 and Ethernet			2				
Supply:							
85...253 V a.c., 90...300 V d.c.				1			
20...40 V a.c., 20...60 V d.c.				2			
Version:							
standard with MQTT protocol					MQ		
MQTT protocol + supervisory relay					MS		
with S4AO*: 4 current outputs 0/4 .. 20 mA					01		
with S4AO*: 4 voltage outputs 0 .. 10 V					02		
with S4AO*: 4 outputs (2 groups 1 x 0..10 V + 1 x 0/4 .. 20 mA)					03		
custom-made**					XX		
Language:							
Polish/ English						M	
other**						X	
Acceptance tests:							
without additional quality requirements							0
with an extra quality inspection certificate							1
with calibration certificate							2
acc.to customer's request							X

ORDERING WAY OF ADDITIONAL FUNCTIONS (SUPERVISORY RELAY)

Ordering code	Description of the license key
LKEY WXNR30IOTMS	activation of the supervisory relay function in NR30IoT

Important: When ordering, please provide the meter's execution code and serial number NR30IoT. It is placed on the meter's nominal plate, in the configuration menu in the Information mode or on the bar in the eCon program.

Order example:

The code: **NR30IoT 1121MQM0** means:

NR30IoT - NR30IoT meter
1 – input current 1/5 A (X/1; X/5)
1 – input voltage 3x57.7/100 V up to 3x100/170 V,
2 – RS485 and Ethernet,
1 – supply 85..253 V a.c., 90..300 V d.c.
MQ – standard version with MQTT protocol,
M – polish/english language version
0 – without additional quality requirements.

* 4-channel S4AO analog output module will be made in english version with the same power supply as the ordered NR30IoT meter, unless the customer specifies otherwise. The S4AO module communicates with the NR30IoT meter via the RS485 Modbus Master interface, therefore cooperation with S4AO excludes the use the NR30IoT meter RS485 interface for communication with another Master.

**after agreement with the manufacturer

LUMEL S.A.
ul. Sulechowska 1, 65-022 Zielona Góra, Poland
tel.: +48 68 45 75 100, fax +48 68 45 75 508
www.lumel.com.pl

Export department:
tel.: (+48 68) 45 75 139, 45 75 233, 45 75 321, 45 75 386
fax.: (+48 68) 32 54 091
e-mail: export@lumel.com.pl