Brand of NTN corporation

Technical data

UCPE216

Bearing units



Grey cast housing, radial insert ball bearing with socket set screws,seal with slinger

KIT CONTENT

UC216G2, PE216

VISUAL (S)

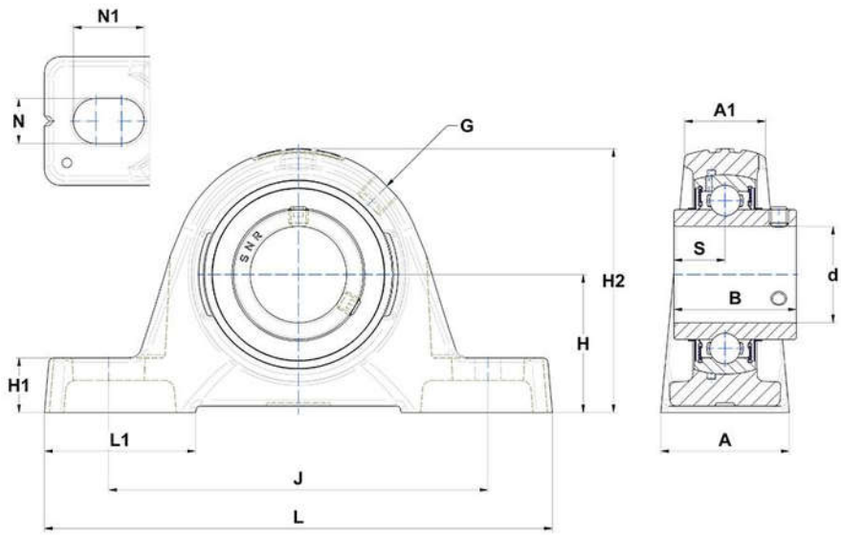

PRODUCT DEFINITION

Brand	SNR
A - Housing width	78 mm
A1 - Housing top width	55 mm
B - Width of Inner Ring	82,6 mm
d - Shaft diameter	80 mm
G - Grease fitting	R1/8"

NTN Europe
1 rue des Usines · BP 2017 · 74010 Annecy Cedex · France · Tel. +33 (0)4 50 65 30 00
S.A. au capital de 322 639 919 € · RCS ANNECY B 325 821 072 · Id. Fiscale : FR 48 325 821 072
SIRET 325 821 072 00015 · Code APE 2815 Z · Code NACE 28.15

PRODUCT DEFINITION	
H - Distance mounting base to centerline spheric. seating diam.	89 mm
H1 - Housing foot height	30 mm
H2 - Housing height	175 mm
J - Mounting holes distance	232 mm
L - Housing length	290 mm
L1 - Housing foot length	90 mm
N - Mounting hole dimension	26 mm
N1 - Mounting hole length	34 mm
S - Distance front side/bearing centre	33,3 mm

PRODUCT PERFORMANCE	
C - Dynamic load rating	72500000 mN
C0 - Static load rating	54200000 mN
Operating temperature min.	253,15 °K
Operating temperature max.	373,15 °K

OTHER FEATURES	
Mass	9,09 kg
Recommended tightening torque for set screw	33 N-m