D1021-544 PANEL MOUNT WATERPROOF PLUNGER SWITCH



- **Stainless Steel Enclosure**
- **Cover Material: Santoprene (Thermoplastic)**
- **Momentary Switch**

CPI's Panel Mounted Plunger switch is tough in hostile, wet environments. Designed primarily as lanyard switches for personal watercraft, our D1021 Series plungers brackets are adaptable for various other applications and work with any of our waterproof B Series momentary switches. It comes with an all-stainless case and thermoplastic bushing. An optional plunger seal (C1900) is available separately.

Typical Applications

- **Door Interlock**
- **Door Switch**
- **Emergency Stop Switch**
- **Gun Firing Control**
- **Horn Switch**
- **Interlock Switches**
- **Laser Sighting Switch**
- **Marine Switches**
- **Momentary Torch Switch**
- **Outdoor Control Panels**
- **Power On**
- **Remote Horn Signal Switch**

Specifications	
Contact Configuration	NO (normally-open)
Electrical Rating	28 VDC / 120VAC 5 A resisitive, 3A inductive
Endurance	100,000 cycles
Operating Temperature	-40 to 221°F / -40 to 105°C
Cover Material	Santoprene (thermoplastic)
Leads	18 AWG GXL insul. wire, 24" / 609.6mm length

Dimensions

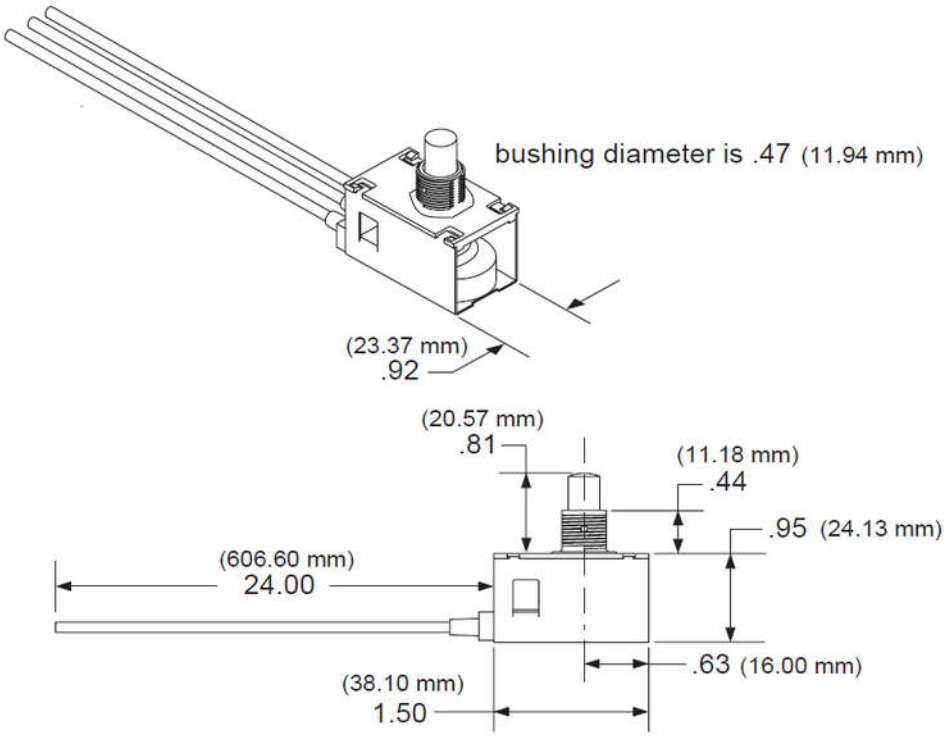
bushing diameter is .47 (11.94 mm)
(23.37 mm)
.92
(20.57 mm)
.81
(11.18 mm)
.44
.95 (24.13 mm)
(606.60 mm)
24.00
.63 (16.00 mm)
(38.10 mm)
1.50