XV-152
MICRO PANEL



Powering Business Worldwide

Manufacturer

Eaton Automation AG
Spinnereistrasse 8-14
CH-9008 St. Gallen
Switzerland
www.eaton.eu
www.eaton.com

Support

Region North America
Eaton Corporation
Electrical Sector
1111 Superior Ave.
Cleveland, OH 44114
United States
877-ETN-CARE (877-386-2273)
www.eaton.com

Other regions
Please contact your local supplier or send an Email to: automation@eaton.com

Original instructions
The German version of this document is the original instructions.

Translations of the original instructions
All non-German editions of this document are translations of the original instructions.

Editor
Monika Jahn

Brand and product names
All brand and product names are trademarks or registered trademarks of the owner concerned.

Copyright
© Eaton Automation AG, CH-9008 St. Gallen

All rights reserved, also for the translation.

None of this document may be reproduced or processed, duplicated or distributed by electronic systems in any form (print, photocopy, microfilm or any other process) without the written permission of Eaton Automation AG, St. Gallen.

Subject to modifications.

Contents

1	**General**	**5**
1.1	Purpose of these Operating Instructions	5
1.2	Comments about this document	5
1.3	Additional documentation	6
2	**Device description**	**7**
2.1	Function	7
2.2	Intended use	7
2.3	Device versions	7
2.4	Package contents	9
2.4.1	5.7" and 8.4" devices	9
2.4.2	10.4" devices	9
2.5	Accessories	9
2.6	Designation	10
3	**Safety regulations**	**11**
3.1	General	11
3.2	Meaning of symbols	12
3.3	Mandatory requirements, personnel	13
3.3.1	Work safety	13
3.3.2	Qualification of personnel	13
3.3.3	Operating Instructions	13
3.3.4	Installation, maintenance and disposal	13
3.3.5	Prohibited use	13
3.3.6	Requirements for proper operation	14
3.4	Device related hazards	15
4	**Operating and indication elements**	**19**
4.1	Operating and indication elements on the front	19
4.2	Operating elements on the service side	20
5	**Installation**	**21**
5.1	Safety regulations	21
5.2	Requirements for the place of installation	22
5.2.1	Engineering conditions of acceptability by Underwriters Labaratories Inc. (UL)	22
5.2.2	Requirements for the mounting position	22
5.3	Interfaces	23
5.3.1	Overview of interfaces	24
5.3.2	Preparation of cables with D-Sub connector	25
5.3.3	Power supply	27
5.3.4	RS232 (System Port)	28
5.3.5	Ethernet	30
5.3.6	USB Device	31
5.3.7	USB Host	31
5.3.8	SmartWire-DT Master	32
5.3.8.1	Additional documentation for devices with SmartWire-DT Master interface	32

5.3.8.2 Operating and indication elements of the SmartWire-DT Master interface 33
5.3.8.3 POW/AUX (power supply for SmartWire-DT) 34
5.3.8.4 SWD (SmartWire-DT interface) 35
5.3.8.5 Commissioning of the SmartWire-DT netwerk 36
5.3.9 CAN 38
5.3.10 Profibus 41
5.3.11 RS485 43
5.4 Mounting 45
5.4.1 Mounting the device 46

6 Operation 49
6.1 Safety regulations 49
6.2 Starting the device 50
6.3 Switching off the device 50
6.4 Inserting and removing an SD card 51

7 Maintenance and service 53
7.1 Safety regulations 53
7.2 Maintenance 54
7.2.1 Cleaning the resistive touch 54
7.2.2 Recalibrating a resistive touch 54
7.2.3 Battery 54
7.3 Service 55
7.3.1 Repairs 55
7.4 Troubleshooting 56

8 Storage, transport and disposal 57
8.1 Safety regulations 57
8.2 Storage 57
8.3 Transport 57
8.4 Disposal 58

9 Technical data 59
9.1 Dimensions and weights 59
9.1.1 5.7" devices 59
9.1.2 8.4" devices 60
9.1.3 10.4" devices 61
9.2 Display 62
9.3 Touch sensor 62
9.4 System 63
9.5 Interfaces 63
9.5.1 Power supply 64
9.5.2 SmartWire-DT Master 65
9.5.2.1 POW/AUX (power supply interface for SmartWire-DT) 65
9.5.2.2 SWD (SmartWire-DT interface) 66
9.6 Enclosure ratings 67
9.7 Agency approvals and standards 67
9.8 Applicable standards and regulations 68
9.9 Ambient conditions 69

1 General

1.1 Purpose of these Operating Instructions

These Operating Instructions contain the information required for the correct and safe use of the MICRO PANELs XV-152. The Operating Instructions are part of the devices and must therefore be kept nearby.

These Operating Instructions describe all aspects of the devices: transport, installation, commissioning, operation, maintenance, storage and disposal. The operating system and the application software are not described.

☞ **Read Chapter 3 Safety regulations, 🗎 11 before working with the device. This contains important information for your personal safety. This chapter must be read and understood by all persons working with this device.**

⚠WARNING



Incomplete copy of the Operating Instructions

Working with individual pages of these Operating Instructions may cause damage to property or personnel by failure to observe safety-related information.

▶ Always work with the complete document.

1.2 Comments about this document

Please send any comments, recommendations or suggestions relating to this document to info-automation@eaton.com.

1.3 Additional documentation

The following documents may be helpful in the use of the device in addition to this document:

[1] MN04802013Z-EN Quick Start Guideline XV100
(commissioning the MICRO PANEL, establishing communication with the programming PC and creating projects with GALILEO and XSoft-CoDeSys-2)

[2] MN05010007Z-EN System Description Windows CE
(operation of the Windows CE operating system on MICRO PANELs)

[3] MN05010009Z-EN System Description Networks in Brief
(information on networks in general and on the integration of PCs and MICRO PANELs in networks)

The documents can be downloaded from:

- www.moeller.net, «Support» section
- www.eaton.eu (search document No. via search field of the home page)
- www.eaton.com (search document No. via search field of the home page)
- www.eaton-automation.com, «DOWNLOADS» section

Documents relevant for the devices with SmartWire-DT Master interface, see Chapter 5.3.1 Overview of interfaces, 24.

2 Device description

2.1 Function

MICRO PANELs XV-152 can be used as HMI devices or as integrated HMI/PLC devices.

2.2 Intended use

MICRO PANELs XV-152 are primarily used in machine and system building. They are designed exclusively for the visualization, operation and control of machines and systems. Any other use must be agreed beforehand with the manufacturer.

2.3 Device versions



Abb. 1 XV-152

MICRO PANELs XV-152 are available in the following versions:

Basic device	Display	Communication interfaces	XV-152 type
Version D: ■ 1 Slot for 1 SD card ■ Integrated interfaces: 1 × Ethernet 100/10 1 × USB Device 1 × USB Host Communication interfaces	Resistive touch, 5.7" TFT-LCD, 64k colors, VGA	RS232	XV-152-D0-57TVR…
		RS485 and RS232	XV-152-D4-57TVR…
		CAN, RS485 and RS232	XV-152-D6-57TVR…
		Profibus, RS485 and RS232	XV-152-D8-57TVR…
	Resistive touch, 8.4" TFT-LCD, 64k colors, VGA	RS232	XV-152-D0-84TVR…
		RS485 and RS232	XV-152-D4-84TVR…
		CAN, RS485 and RS232	XV-152-D6-84TVR…
		Profibus, RS485 and RS232	XV-152-D8-84TVR…
	Resistive touch, 10.4" TFT-LCD, 64k colors, VGA	RS232	XV-152-D0-10TVR…
		RS485 and RS232	XV-152-D4-10TVR…
		CAN, RS485 and RS232	XV-152-D6-10TVR…
		Profibus, RS485 and RS232	XV-152-D8-10TVR…
Version E: ■ 1 Slot for 1 SD card ■ Integrated interfaces: 1 × Ethernet 100/10 1 × USB Device 1 × USB Host Communication interfaces	Resistive touch, 5.7" TFT-LCD, 64k colors, VGA	CAN, RS485 and SmartWire-DT Master	XV-152-E6-57TVR…
		Profibus, RS485 and SmartWire-DT Master	XV-152-E8-57TVR…
	Resistive touch, 8.4" TFT-LCD, 64k colors, VGA	CAN, RS485 and SmartWire-DT Master	XV-152-E6-84TVR…
		Profibus, RS485 and SmartWire-DT Master	XV-152-E8-84TVR…
	Resistive touch, 10.4" TFT-LCD, 64k colors, VGA	CAN, RS485 and SmartWire-DT Master	XV-152-E6-10TVR…
		Profibus, RS485 and SmartWire-DT Master	XV-152-E8-10TVR…

Tab. 1 Device versions

2.4 Package contents

If required, styluses in sets of 5 (ACCESSORIES-TP-PEN-5, Article No. 171192) and other accessories can be ordered. Please contact the supplier.

The accessories supplied with the MICRO PANELs XV-152 depend on the size of the device.

2.4.1 5.7" and 8.4" devices

Qty	Designation
1	MICRO PANEL: ■ XV-152-…-57TVR… or ■ XV-152-…-84TVR…
8 or 4	Retaining brackets with threaded pin for mounting the device
1	Sealing strip for mounting the device (glued in the device and/or loose enclosed)
1	Power supply connector for the device
1	Power supply connector for SmartWire-DT Master (only supplied with XV-152-E… devices)

Tab. 2 Package contents for 5.7" and 8.4" devices

2.4.2 10.4" devices

Qty	Designation
1	MICRO PANEL: ■ XV-152-…-10TVR…
8 or 6	Retaining brackets with threaded pin for mounting the device
1	Sealing strip for mounting the device (glued in the device and/or loose enclosed)
1	Power supply connector for the device
1	Power supply connector for SmartWire-DT Master (only supplied with XV-152-E… devices)

Tab. 3 Package contents for 10.4" devices

2.5 Accessories

Different accessories are available. Use only original accessories.

Order the accessories required from your supplier. Required accessories for:
- **Mounting with increased protection class:**
  See Chapter 9.6 Enclosure ratings, 67.
- **Use in a potentially explosive atmosphere:**
  See Chapter 9.7 Agency approvals and standards, 67.

2.6 Designation

Nameplate

A nameplate is fixed on the rear of the device in order to identify it. The nameplate contains the following information:

- Manufacturer address
- Type designation
- Power supply required
- Part no. (Part-No or Art.-No)
- Serial no.
- Time of manufacturing (week/year)
- Approval mark and information to the approval
- Arrangement of interfaces and operating elements
- Permissible mounting options (top edge «Top»)

Support

To ensure fast and optimum support always provide the support personnel with the following information on the nameplate:

- Part no. (Part-No or Art.-No)
- Serial no.

3 Safety regulations

3.1 General

Hazards may still occur even though the device meets the current state of the art and complies with all recognized safety requirements.

The device must only be installed and commissioned in perfect technical condition and in compliance with this document.



Read this chapter before working with the device. This contains important information for your personal safety. This chapter must be read and understood by all persons working with this device.

3.2 Meaning of symbols

The following symbols are used in this document according to the hazard level described:

⚠DANGER



Signal word DANGER

Indicates an imminently hazardous situation which, if not avoided, will result in death or serious injury.

⚠WARNING



Signal word WARNING

Indicates a potentially hazardous situation which, if not avoided, could result in death or serious injury.

⚠CAUTION



Signal word CAUTION

Indicates a potentially hazardous situation which, if not avoided, could result in minor or moderate injury.

CAUTION



Signal word CAUTION without safety alert symbol

Indicates a situation which, if not avoided, could result in material damage.

Indicates useful information.

The danger symbol used and the text indicate the actual danger and the related preventative measures.

3.3 Mandatory requirements, personnel

3.3.1 Work safety

All applicable work safety regulations (in-house and national) must be observed.

3.3.2 Qualification of personnel

The personnel responsible for installation, operation, maintenance and service must be adequately qualified. These persons must be sufficiently trained or instructed and they must be informed of all hazards and risks associated with the device.

3.3.3 Operating Instructions

It must be ensured that any person working with the device in any phase of its lifespan has read and understood the relevant sections of the Operating Instructions.

⚠WARNING



Incomplete copy of the Operating Instructions

Working with individual pages of these Operating Instructions may cause damage to property or personnel by failure to observe safety-related information.

▶ Always work with the complete document.

3.3.4 Installation, maintenance and disposal

It must be ensured that the device is properly connected, mounted, maintained and disposed of in compliance with all relevant standards and safety regulations.

3.3.5 Prohibited use

The implementation of safety functions (relating to the protection of personnel and machinery) using the device is prohibited.

3.3.6 Requirements for proper operation

The following points must be observed so that the device meets the contractual requirements:

- Only qualified personnel may work with the device.
- These persons must have read the Operating Instructions and must observe the requirements described.
- The ambient conditions stated must be observed. See Chapter 9.9 Ambient conditions, 69.
- The maintenance work must be carried out correctly.
- Potentially explosive atmosphere, Zone 22:
  The ground resistance of accessible metal parts must be less than 10^9 ohms.

No liability is accepted for damage, consequential damage and accidents caused by the following:

- Failure to observe work safety regulations
- Failure or malfunction of the device
- Improper handling or use
- Failure to observe the Operating Instructions
- Conversions, modifications and repairs to the device

Repairs, see Chapter 7.3.1 Repairs, 55.

3.4 Device related hazards

⚠DANGER



Explosion hazard

Death, serious injury or material damage may occur if an electrical plug connection is removed in a potentially explosive atmosphere during operation or if the device is subjected to hazardous knocks.

- Only use the device in the following environments:
  - Environments not subject to explosion hazards
  - Potentially explosive atmosphere, Zone 22 (according to ATEX 94/9/EC)
- Potentially explosive atmosphere, Zone 22:
  The ground resistance of accessible metal parts must be less than 10^9 ohms.
- When used in a potentially explosive atmosphere, Zone 22, the environment has to be designed to avoid any bunch discharge.
- Prevent the device from being subjected to hazardous knocks.
- Only operate the device in potentially explosive atmospheres if it is correctly mounted.
- Switch off the device before removing the plug connections.

⚠WARNING



Live parts in the device

When the device is opened, there is a risk of electric shock if live parts are touched.

- The device must not be opened.

⚠WARNING



Potential equalization currents

Large equalization currents between the protective ground systems of different devices may cause operational malfunctions due to signal interference and may even cause fires.

- If necessary, a potential equalization conductor should be installed parallel to the cable. This should have a cross-section that is a multiple of the cable shield.

⚠CAUTION



Electrostatic discharge

Electrostatic discharge may damage or destroy electronic components.

- Avoid contact with components (such as connector pins) that are susceptible to electrostatic discharge.
- Discharge (by touching a grounded metal object) any static charge accumulated in your body before touching the device.

CAUTION



Non-isolated interfaces

The device may be damaged due to potential differences.

- The GND terminals of all bus stations must be connected.

CAUTION



Sensitive resistive touch surface

Damage to the resistive touch due to the use of pointed or sharp objects.

- Only activate the resistive touch with your finger or a stylus.
- When wearing gloves, ensure that these are clean. They must not be covered with abrasive dust or sharp particles.

CAUTION



Data loss

During a write operation, the SD card may lose data or may be destroyed if it is removed or if there is a power failure.

- Only insert the SD card when the device is in a de-energized state.
- Avoid write operations to SD cards. Reasons:
  - The number of write cycles possible on SD cards is limited.
  - A power failure during write operations will most likely lead to loss of data.
- Only remove the SD card when the device is in a de-energized state.
- Before switching off, ensure that no software write operations to the SD card are in progress.

CAUTION



Device condensation

If the device is or was exposed to climatic changes (temperature fluctuation, air humidity) moisture can form on or in the device (device condensation). In this case, there is a risk of short-circuit.

- The device must **not** be switched on when device condensation is present.
- If condensation is present on the device, or if it was exposed to temperature fluctuations, it must be allowed to adjust to room temperature (do not expose the device to the direct heat of heating devices) prior to commissioning.

CAUTION



UV light

When exposed to UV light, plastics can embrittle and the lifespan of the device is reduced.

- Protect the device against direct sunlight and lamps with UV rays.

CAUTION



Cleaning the device

Damage to the device due to the use of pointed or sharp objects or by liquids.

- Do not use any pointed or sharp objects (e.g. knife) for cleaning.
- Do not use any aggressive or abrasive cleaning agent or solvent.
- Avoid any liquid entering the device (risk of short-circuit).

4 Operating and indication elements

4.1 Operating and indication elements on the front

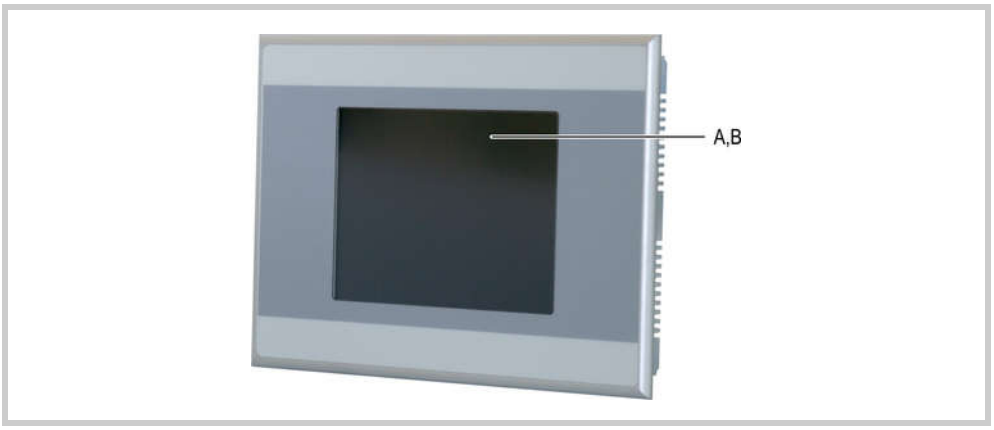

Abb. 2 Operating and indication elements on the front

The device has the following operating and indication elements on the front:

Element	Function
A Touch sensor	Resistive touch: Detection of the actuation of the operating elements shown on the display. These devices are operated by touching the operating elements with your finger or with a stylus.
B Display	Display operating and indication elements.

Tab. 4 Operating and indication elements on the front

4.2 Operating elements on the service side

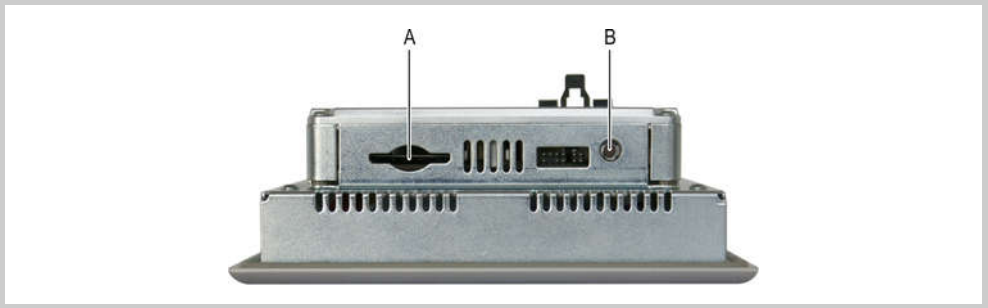

Abb. 3 Operating elements on the service side

The device has the following operating elements on the service side:

Element	Function
A SD slot 0	Slot for SD card.
B Control button	Function depends on the software used.

Tab. 5 Operating elements on the service side

5 Installation

5.1 Safety regulations

Read Chapter 3 Safety regulations, 11 before installing and commissioning the device. This contains important information for your personal safety.

5.2 Requirements for the place of installation

- Approvals:
  The device must only be used in locations that are approved for the device. See the markings on the nameplate and Chapter 9 Technical data, 59.
- Power supply:
  The power supply must comply with the requirements stated in Chapter 9.5.1 Power supply, 64.

5.2.1 Engineering conditions of acceptability by Underwriters Labaratories Inc. (UL)

For the approval in accordance with the standard UL 508, consideration must be given to the following:

- Ambient conditions:
  - Max. ambient temperature: 50°C
  - Pollution degree 2
- The screw terminals of the connector for the power supply must be tightened with a max. tightening torque of 0.6…0.8 Nm or 5…7 Lb. In.
- Only XV-152-E… devices:
  The supply voltage U_{Aux} of the SmartWire-DT Master interface must be protected externally against over-current and short-circuit by:
  - miniature circuit-breaker 24 VDC, rated current 2 A, tripping characteristic Z
  - or fuse 2 A.

5.2.2 Requirements for the mounting position

The device is designed for mounting in control cabinets, control panels or control desks. It can be mounted horizontally or vertically. The following requirements must be fulfilled when selecting a suitable mounting position:

- The device should not be exposed to direct sunlight (when exposed to UV light, plastic parts of the device can embrittle and the lifespan of the device is reduced).
- If the device is to be used in potentially explosive atmospheres, the device must not be subjected to hazardous knocks.
- The inclination angle for vertical mounting without forced ventilation must be max. ±45°.
- The operating elements on the service side of the device and the cable connections are accessible after the device has been mounted.
- The ambient conditions stated must be observed. See Chapter 9.9 Ambient conditions, 69.
- Sufficient ventilation (cooling) must be ensured by means of:
  - Clearance of at least 3 cm to the ventilation slots
  - Clearance of at least 15 cm from heat radiating components such as heavily loaded transformers
  - The expected temperatures should be within the permissible range. See Chapter 9.9 Ambient conditions, 69.
- Properties of the mounting surfaces:
  - Material thickness at the mounting cutout 2…5 mm
  - Flatness ≤ 0.5 mm
    (this requirement must also be fulfilled when the device is mounted!)
  - Surface roughness Rz ≤ 120

5.3 Interfaces

⚠WARNING



Potential equalization currents

Large equalization currents between the protective ground systems of different devices may cause operational malfunctions due to signal interference and may even cause fires.

- If necessary, a potential equalization conductor should be installed parallel to the cable. This should have a cross-section that is a multiple of the cable shield.

CAUTION



Operational malfunctions

Use of unsuitable or improperly prepared cables, as well as incorrect wiring will mean that neither the values stated in the technical data nor the electromagnetic compatibility (EMC) can be ensured.

- Only use cables prepared by specialists.
- The cables used must be prepared according to the interface description in this document.
- The wiring instructions for the relevant interface must be observed when wiring the device.
- Any generally applicable regulations and standards must be fulfilled.

CAUTION



Non-isolated interfaces

The device may be damaged due to potential differences.

- The GND terminals of all bus stations must be connected.

5.3.1 Overview of interfaces

The interfaces will vary depending upon the device version. See nameplate and Chapter 2.3 Device versions, 🗎 7.

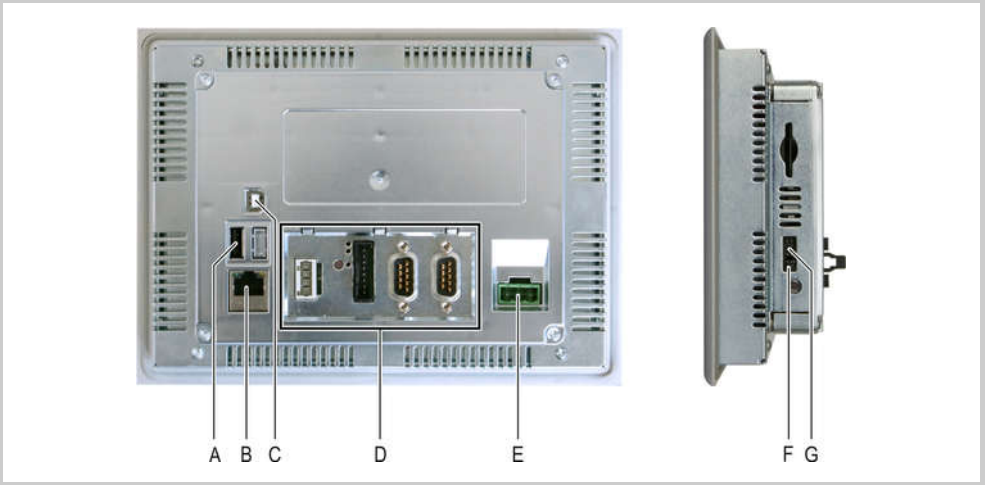

Abb. 4 Interfaces of the device

Interface		Interface description
A	USB Host	→ Chapter 5.3.7, 🗎 31
B	Ethernet	→ Chapter 5.3.5, 🗎 30
C	USB Device	→ Chapter 5.3.6, 🗎 31
D	Interfaces, depending on the device version:	
	SmartWire-DT Master	→ Chapter 5.3.8, 🗎 32
	CAN	→ Chapter 5.3.9, 🗎 38
	Profibus	→ Chapter 5.3.10, 🗎 41
	RS232 (System Port)	→ Chapter 5.3.4, 🗎 28
	RS485	→ Chapter 5.3.11, 🗎 43
E	Power supply	→ Chapter 5.3.3, 🗎 27
F	DIAG	Only for service tasks
G	Jumper UPD/RUN	Only for service tasks

Tab. 6 Overview of interfaces

5.3.2 Preparation of cables with D-Sub connector

The preparation of bus cables is an essential factor in ensuring reliable operation and electromagnetic compatibility (EMC).

Wiring requirements

- The cables must be shielded.
- The cable shield must be made from a copper braid.
- The cable shield must make a low impedance connection with the connector casing over a large contact area. This is achieved by:
  - Use of metal or metallized connector casings with a cable clamp for strain relief.
  - The cable clamp must be screwed securely to the connector.

Connecting the cable shield

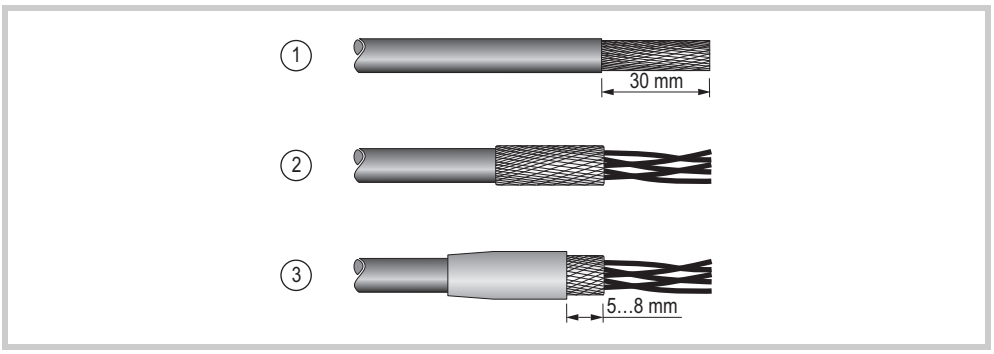

Abb. 5 Connecting the cable shield

1. Strip the cable end so that approx. 3 cm of the shield braid is exposed.
2. Fold back the shield braid over the cable shield.
3. Fit approx. 3 cm of heat shrinkable tubing over the folded back end of the shield braid or use a rubber grommet.
   - 5…8 mm of the shield braid must be exposed at the cable end.
   - The folded back shield braid end must be covered by the heat shrinkable tubing or by the rubber grommet.
4. Fit the D-Sub connector to the cable end:
   - The exposed metal shield braid must be clamped to the connector casing with the cable clamp.

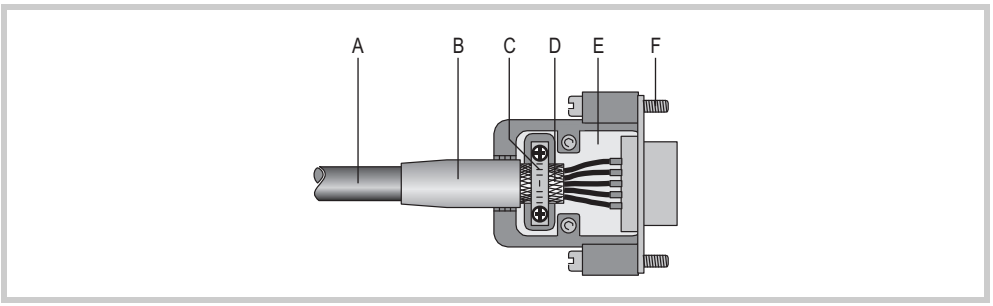

Abb. 6 Cable prepared with D-Sub connector

A Cable with cable sheath
B Heat shrinkable tubing or rubber grommet
C Cable clamp
D Shield braid
E D-Sub connector
F Mounting screw UNC

The EMC values stated in the technical data (immunity and emission) can only be guaranteed by observing the prescribed cable preparation!

5.3.3 Power supply

The device is provided with an internal fuse and is protected against polarity reversal. The functional earthing terminal is connected to both the housing and the 0 V terminal. The device power supply is **not** electrically isolated.

The device requires a 24 VDC power supply from an AC/DC converter with safe isolation (SELV). For other power supply requirements see Chapter 9.5.1 Power supply, 64.

- SELV (safety extra low voltage):
  Circuit in which no dangerous voltage is present, even in the event of a single fault.



Abb. 7 Power supply interface

Wiring

- Phoenix Contact MSTB 2.5/3-ST-5.08 connector, Phoenix order no. 1757022 is supplied with the device.

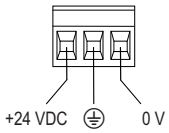

Abb. 8 Phoenix Contact MSTB 2.5/3-ST-5.08 connector (view from the wiring side)

Connection	Assignment
+24 VDC	+24 VDC power supply
?	Functional earthing connected to housing. Does not have to be connected. This connection can be used as protective earthing connection if the mounting environment requires this.
0 V	0 V power supply (connected to ⏚)

Tab. 7 Assignment of connector

- The following must be observed when the connector wiring is prepared:

Preparing the wiring of the connector	
Terminal type	Pluggable screw terminal
Cross-section	■ min. 0.75 mm^2 / max. 2.5 mm^2 (lead or wire) ■ min. AWG18 / max. AWG12
Stripping length	7 mm
Max. tightening torque	0.6…0.8 Nm / 5…7 Lb. In.

Tab. 8 Preparing the wiring of the connector

5.3.4 RS232 (System Port)

The RS232 interface is **not** electrically isolated. The GND pin is directly connected to the housing potential.

CAUTION

Non-isolated interfaces

The device may be damaged due to potential differences.

▶ The GND terminals of all bus stations must be connected.

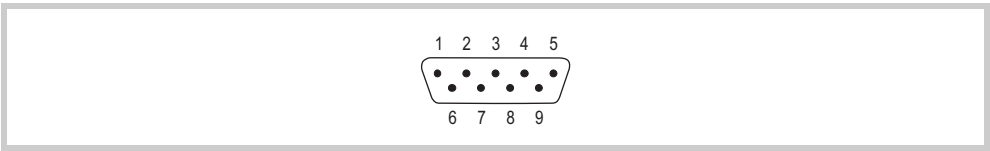

Abb. 9 RS232 interface (9-pin, D-Sub, male, UNC)

Pin	Signal	Assignment
1	DCD	Data Carrier Detected
2	RxD	Receive Data
3	TxD	Transmit Data
4	DTR	Data Terminal Ready
5	GND	Ground
6	DSR	Data Set Ready
7	RTS	Request to Send
8	CTS	Clear to Send
9	RI	Ring Indicator

Tab. 9 Pin assignment of the RS232 interface

Wiring

- Shielded cables must be used.
- The maximum baud rate depends on the cable length:

Cable length	Max. baud rate
2.5 m	115200 Bit/s
5 m	57600 Bit/s
10 m	38400 Bit/s
15 m	19200 Bit/s
30 m	9600 Bit/s

Tab. 10 Relationship of cable length / baud rate

☞ **When preparing the cables, ensure that there is a low-resistance connection between the cable shield and the connector casing (→ Chapter 5.3.2, 🗎 25).**

5.3.5 Ethernet

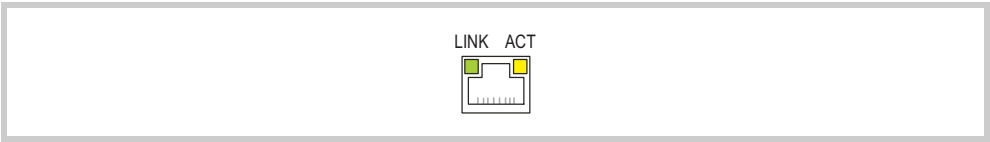

Abb. 10 Ethernet interface (RJ45 socket)

LED	Signal	Meaning
ACT (yellow)	flashes	Ethernet is active (data traffic)
LINK (green)	lit	Active network is connected and detected

Tab. 11 Control LEDs of the Ethernet interface

Cable

- Use shielded twisted pair cable (STP) for networking:
  - For device to device connection: crossover cable
  - For connecting to the hub/switch: 1:1 patch cable
- Maximum cable length: 100 m.

CAUTION



Forces acting on the Ethernet interface

Communication can be disturbed and the connection mechanics damaged if the Ethernet interface is exposed to severe vibration or the RJ45 plug connection is pulled.

- ▶ Protect the RJ45 connection from severe vibration.
- ▶ Protect the RJ45 connection from pulling on the socket.

5.3.6 USB Device

The USB Device interface supports USB 2.0.



Abb. 11 USB Device interface (USB Device, type B)

Cable

- Only use shielded USB standard cable.
- Maximum cable length: 5 m.

5.3.7 USB Host

The USB Host interface supports USB 2.0.

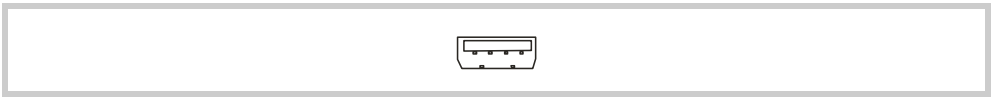

Abb. 12 USB Host interface (USB Host, type A)

Cable

- Only use shielded USB standard cable.
- Maximum cable length: 5 m.

5.3.8 SmartWire-DT Master

The SmartWire-DT Master interface is **not** electrically isolated.

CAUTION



Not electrically isolated SmartWire-DT system

The device may be damaged due to potential differences.

▶ Provide a common star point for the earth wiring.

5.3.8.1 Additional documentation for devices with SmartWire-DT Master interface

In addition to this document, the following documents are required to build a SmartWire-DT netwerk, to install the network at the SmartWire-DT Master interface and to operate the network:

- MN05006002Z-EN Manual SmartWire-DT The System
  (system description, engineering, installation, commissioning and diagnostics of a SmartWire-DT netwerk)
- MN05006001Z-EN Manual SmartWire-DT Units
  (surface mounting, engineering, installation, etc. of the single SmartWire-DT slaves)
- MN04802091Z-EN User Manual XSoft-CoDeSys-2: PLC programming XV100
  (Use of the PLC programming tool XSoft-CoDeSys-2 and the PLC runtime system for the XV100 device type with Windows CE)

The documents can be downloaded from:

- www.moeller.net, «Support» section
- www.eaton.eu (search document No. via search field of the home page)
- www.eaton.com (search document No. via search field of the home page)
- www.eaton-automation.com, «DOWNLOADS» section

5.3.8.2 Operating and indication elements of the SmartWire-DT Master interface



Abb. 13 SmartWire-DT Master interface

Element	Function
A POW/AUX interface	Power supply interface for SmartWire-DT (→ Chapter 5.3.8.3, 34)
B POW LED	Lit if the SmartWire-DT netwerk is supplied with current.
C SWD LED	Indicates whether the physical structure of the SmartWire-DT network matches the target configuration. Each time the power supply is switched on, the configurations are compared (→ Chapter 5.3.8.4, 35).
D Config LED	Indicates whether the project configuration of the SWD master defined in the PLC matches the target configuration of the SmartWire-DT network stored in the device. Each time the power supply is switched on, the configurations are compared (→ Chapter 5.3.8.5, 36).
E Configuration button	Configuring the SmartWire-DT network.
F SWD interface	SmartWire-DT interface (→ Chapter 5.3.8.4, 35)

Tab. 12 Operating and indication elements of the SmartWire-DT Master interface

5.3.8.3 POW/AUX (power supply for SmartWire-DT)

The POW/AUX interface is **not** electrically isolated.

The following supply voltages are required in a SmartWire-DT netwerk:

- Supply voltage POW:
  The device supply voltage for the electronics of the downstream SmartWire-DT slaves (15 VDC) is generated from the 24 VDC supply voltage applied to the POW connection.
- Supply voltage AUX:
  If there are any contactors or motor starters in the SmartWire-DT topology, a 24 VDC voltage AUX must be additionally supplied as a control voltage for the contactor coils.

For other power supply requirements see Chapter 9.5.2 SmartWire-DT Master, 📄 65.

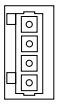

Abb. 14 Power supply interface POW/AUX

Wiring

- WAGO connector, order no. 734-104 is supplied with the device.

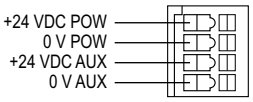

Abb. 15 WAGO connector (view from the wiring side)

Connection	Assignment
+24 VDC POW	Supply voltage U_{Pow} +24 VDC
0 V POW	Supply voltage U_{Pow} 0 V
+24 VDC AUX	Supply voltage U_{Aux} +24 VDC
0 V AUX	Supply voltage U_{Aux} 0 V

Tab. 13 Assignment of connector

- The following must be observed when the connector wiring is prepared:

Preparing the wiring of the connector	
Terminal type	Tension clamp terminal
Crimpable wire solid	0.2…1.5 mm^2 (AWG24…16)
Stripping length	6…7 mm

Tab. 14 Preparing the wiring of the connector

- For U_{Aux}, an external over-current and short-circuit protection by miniature circuit-breaker or fuse is required.

Standard	Over-current and short-circuit protection
DIN VDE 0641, Part 11 and IEC/EN 60898	Miniature circuit-breaker 24 VDC, rated current 3 A, tripping characteristic Z
	Fuse 3 A, utilization class gL/gG
UL 508 and CSA-22.2, No. 14	Miniature circuit-breaker 24 VDC, rated current 2 A, tripping characteristic Z
	Fuse 2 A

Tab. 15 Over-current and short-circuit protection

5.3.8.4 SWD (SmartWire-DT interface)

Die SWD interface is **not** electrically isolated.

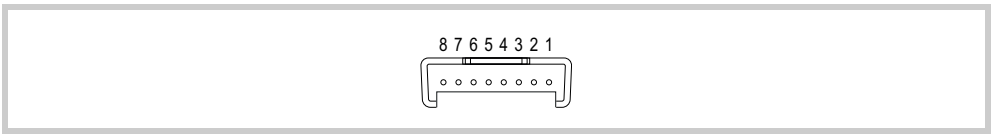

Abb. 16 SWD interface (plug, 8-pin)

Cabling

- Use only the following ribbon cables for connecting the SmartWire-DT netwerk at the SWD interface:
  - SWD4-100LF8-24 with the relevant blade terminals SWD4-8MF2 or
  - SWD4-(3/5/10)F8-24-2S (prefabricated cable)

☞ **Detailed instructions on fitting the blade terminal SWD4-8MF2 are provided in the Document «MN05006002Z-EN Manual SmartWire-DT The System», Chapter «Fitting the blade terminal SWD4-8MF2».**

5.3.8.5 Commissioning of the SmartWire-DT netwerk

Switching on for initial commissioning, after a replacement or after a changed SmartWire-DT configuration

Requirement:

- All SmartWire-DT slaves are connected by SmartWire-DT cables.
- The SmartWire-DT netwerk is connected to the SWD interface.
- The power supply for the device and for SmartWire-DT is applied.
- The POW LED of the SmartWire-DT Master interface lights up.
- The SmartWire-DT status LEDs on the connected SmartWire-DT slaves are flashing or lit.
- A PLC project with configured SWD-Master exists (project configuration).
- The PLC runtime system is installed on the device.

Procedure:

1 Press the configuration button «Config» for at least two seconds.
   - The SWD LED of the SmartWire-DT Master interface begins to flash orange and the SmartWire-DT status LEDs on the connected SmartWire-DT slaves flash.
   - The SWD LED of the SmartWire-DT Master interface begins to flash green.
   - All SmartWire-DT slaves are addressed.
   - The physical structure of the SmartWire-DT network is stored retentively in the device as the target configuration.
   - The SWD LED of the SmartWire-DT Master interface lights up green.

2 Download the PLC project (XSoft-CoDeSys-2) onto the device.
   - If the project configuration is identical to the stored target configuration, the Config LED lights up green and the data exchange of the input and output data can start.

Configuration check
Each time the supply voltage is switched on, the configuration checks are performed:

1 The slaves actually found on the network are compared with the target configuration stored in the device.
   - If the physical structure of the SmartWire-DT network matches the target configuration, the SmartWire-DT network is ready for data exchange.

2 The target configuration stored in the device is compared with the project configuration defined in the PLC.
   - If the target configuration matches the project configuration, the Config LED lights up.

LED	State	Meaning
SWD	Off	No target configuration.
	Red continuous light	■ Short-circuit on the 15 VDC power supply. ■ No SmartWire-DT slave found.
	Red flashing	■ The slaves found in the SmartWire-DT netwerk do not match the target configuration. ■ A SmartWire-DT slave configured as necessary is missing.
	Orange flashing	The physical structure of the SmartWire-DT network is read and stored as the target configuration.
	Green flashing	■ The physical structure of the SmartWire-DT network is compared with the target configuration. ■ The SmartWire-DT slaves are addressed.
	Green continuous light	The slaves found in the SmartWire-DT netwerk match the target configuration. The SmartWire-DT netwerk is ready for data exchange.
Config	Off	■ No project configuration. ■ Faulty target configuration (see SWD LED).
	Red continuous light	Project configuration and stored target configuration are not compatible.
	Green flashing	Project configuration and stored target configuration are compatible.
	Green continuous light	Project configuration and stored target configuration are identical.

Tab. 16 SWD LED and Config LED

☞ **The description of the project configuration (SmartWire-DT configuration in XSoft-CoDeSys-2 project) are provided in the Document «MN04802091Z-EN User Manual XSoft-CoDeSys-2: PLC programming XV100», Chapter «SmartWire-DT configuration».**

5.3.9 CAN

The CAN interface is **not** electrically isolated.

CAUTION

Non-isolated interfaces

The device may be damaged due to potential differences.

▶ The GND terminals of all bus stations must be connected.

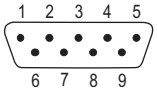

Abb. 17 CAN interface (9-pin, D-Sub, male, UNC)

Pin	Signal	Assignment
1	-	nc
2	CAN-L	Bus line (dominant low)
3	CAN-GND	CAN Ground
4	-	nc
5	-	nc
6	GND	Optional CAN Ground
7	CAN-H	Bus line (dominant high)
8	-	nc
9	-	nc

Tab. 17 Pin assignment of CAN interface in accordance with CiA

- **Pin 3 (CAN-GND) and 6 (GND) are connected internally in the device.**
- **nc: Pins 1, 4, 5, 8 and 9 must not be connected.**
- **The CAN bus drivers are fed internally with power.**
- **No power supply for third-party devices is implemented on the CAN connector.**

Wiring

- Shielded twisted pair cables must be used.

Cable specifications	
Rated surge impedance	120 Ω
Permissible surge impedance	108…132 Ω
Capacitance per unit length	< 60 pF/m
Core cross-section / max. cable length	≥ 0.25 mm^2 / 100 m
	≥ 0.34 mm^2 / 250 m
	≥ 0.75 mm^2 / 500 m

Tab. 18 Cable specifications

- The maximum baud rate depends on the cable length:

Cable length	Max. baud rate
25 m	1000 Kbit/s
50 m	800 Kbit/s
100 m	500 Kbit/s
250 m	250 Kbit/s
500 m	125 Kbit/s
500 m	100 Kbit/s (adjustable via software)
1000 m	50 Kbit/s
2500 m	20 Kbit/s
5000 m	10 Kbit/s

Tab. 19 Relationship of cable length / baud rate



- **The use of repeaters is recommended with cables over 1000 m in length. Repeaters can also be used to implement electrical isolation. Refer to the documentation of the repeater manufacturer for further information.**
- **Observe the recommendations of the CiA (CAN in Automation).**
- **When preparing the cables, ensure that there is a low-resistance connection between the cable shield and the connector casing (→ Chapter 5.3.2, 🗎 25).**

CAN bus topology

- A bus segment can connect up to 32 bus stations.
- Several bus segments can be linked via repeaters (bidirectional amplifiers). Refer to the documentation of the repeater manufacturer for further information.
- A bus segment must be provided with cable termination (120 Ω) at both ends. These terminations must be connected in the connector, directly between pin 2 and 7.



- **The bus segment must be terminated at both ends.**
- **No more than two terminations must be provided on each bus segment.**
- **Transmission faults can occur if operation is carried out without the correct termination.**

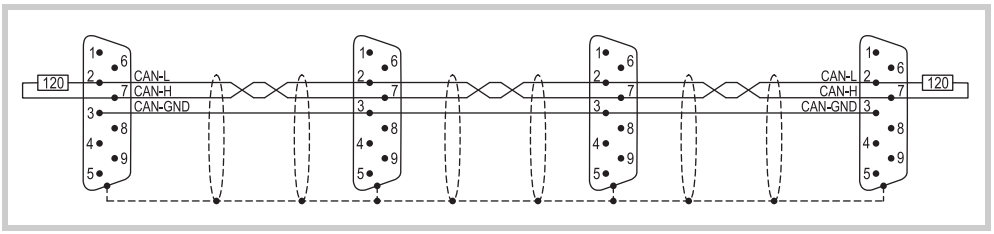

Abb. 18 Bus segment with four bus stations

5.3.10 Profibus

The Profibus interface is **not** electrically isolated.

CAUTION

Non-isolated interfaces

The device may be damaged due to potential differences.

▶ The GND terminals of all bus stations must be connected.

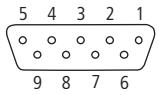

Abb. 19 Profibus interface (9-pin, D-Sub, female, UNC)

Pin	Signal	Assignment
1	-	nc
2	-	nc
3	B	EIA RS 485 line B
4	RTSAS	Output for controlling a repeater
5	M5EXT	0V output for external termination
6	P5EXT	5V output for external termination
7	-	nc
8	A	EIA RS 485 line A
9	-	nc

Tab. 20 Pin assignment of the Profibus interface

Pin 6 (5 V) must not be used as a power supply for external devices.

Wiring

- Shielded twisted pair cables, cable type A (in accordance with Profibus standards IEC/EN 61158 and IEC/EN 61784) must be used.

Cable specifications	
Rated surge impedance	150 Ω
Permissible surge impedance	135…165 Ω
Capacitance per unit length	< 30 pF/m
Loop resistance	< 110 Ω/km
Core cross-section	≥ 0.34 mm^2 (22 AWG)

Tab. 21 Cable specifications

- The maximum baud rate depends on the cable length:

Cable length	Max. baud rate
200 m	1500 Kbit/s
400 m	500 Kbit/s
1000 m	187.5 Kbit/s
1200 m	≤ 93.75 Kbit/s

Tab. 22 Relationship of cable length / baud rate (for cables compliant with cable type A of the Profibus standard IEC/EN 61158 and IEC/EN 61784)

When preparing the cables, ensure that there is a low-resistance connection between the cable shield and the connector casing (→ Chapter 5.3.2, 🗎 25).

Profibus topology

- A bus segment can connect up to 32 bus stations.
- Several bus segments can be linked via repeaters (bidirectional amplifiers). Refer to the documentation of the repeater manufacturer for further information.

The maximum cable length can be increased by using repeaters. Refer to the documentation of the repeater manufacturer for further information.

- Only use bus terminal connectors that are specified for use in the Profibus network. They hold both bus cables on a bus station and ensure a low impedance connection of the cable shield to the shield reference potential of the bus station. These bus terminal connectors contain the Profibus cable termination that can be switched on as required.
- A bus segment must be provided with cable termination at both ends. The termination is passive and is fed from the bus station. It ensures a defined idle signal on the bus when no bus station is transmitting. These bus terminations should be implemented externally in the connector casing according to the Profibus standard (they can also be implemented with the bus terminating connector described above).

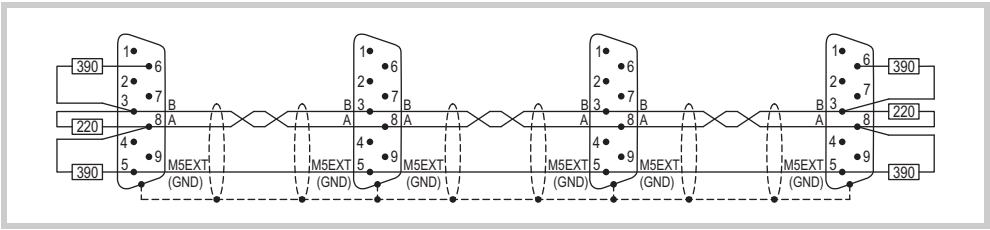

Abb. 20 Bus segment with four bus stations

- **The bus segment must be terminated at both ends.**
- **No more than two terminations must be provided on each bus segment.**
- **At least one of the two terminations must be fed by the bus station.**
- **Transmission faults can occur if operation is carried out without the correct termination on the Profibus network.**

5.3.11 RS485

The RS485 interface is **not** electrically isolated. The GND pin is directly connected to the housing potential.

CAUTION

Non-isolated interfaces

The device may be damaged due to potential differences.

▶ The GND terminals of all bus stations must be connected.

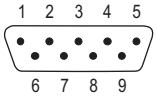

Abb. 21 RS485 interface (9-pin, D-Sub, male, UNC)

Pin	Signal	Assignment
1	-	nc
2	-	nc
3	B	Line B
4	-	nc
5	GND	Ground
6	-	nc
7	A	Line A
8	-	nc
9	-	nc

Tab. 23 Pin assignment of the RS485 interface

☞ **nc: Pins 1, 2, 4, 6, 8 and 9 must not be connected.**

Wiring

Shielded twisted pair cables must be used.

Cable specifications	
Rated surge impedance	120 Ω
Permissible surge impedance	108…132 Ω
Max. cable length	1200 m
Possible baud rates	9600 Bit/s
	19200 Bit/s
	38400 Bit/s
	57600 Bit/s
	115200 Bit/s

Tab. 24 Cable specifications

When preparing the cables, ensure that there is a low-resistance connection between the cable shield and the connector casing (→ Chapter 5.3.2, 🗎 25).

RS485 topology

- A bus segment can connect up to 32 bus stations.
- Several bus segments can be linked via repeaters (bidirectional amplifiers). Refer to the documentation of the repeater manufacturer for further information.

The maximum cable length can be increased by using repeaters. Refer to the documentation of the repeater manufacturer for further information.

- A bus segment must be provided with cable termination (120 Ω) at both ends. These terminations must be connected directly between pin 3 and 7 in the connector.

- **The bus segment must be terminated at both ends.**
- **No more than two terminations must be provided on each bus segment.**
- **Transmission faults can occur if operation is carried out without the correct termination.**

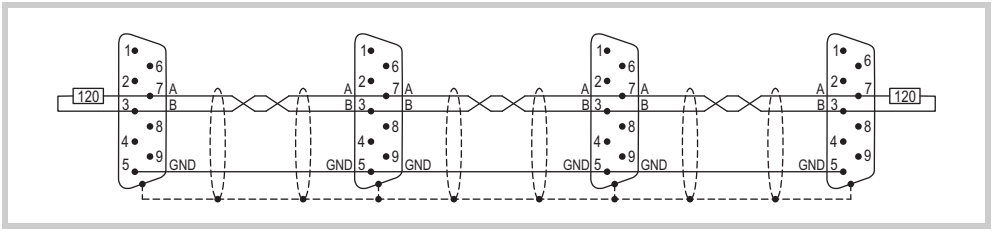

Abb. 22 Bus segment with four bus stations

5.4 Mounting

CAUTION



Operational malfunctions

Use of unsuitable or improperly prepared cables, as well as incorrect wiring will mean that neither the values stated in the technical data nor the electromagnetic compatibility (EMC) can be ensured.

- Only use cables prepared by specialists.
- The cables used must be prepared according to the interface description in this document.
- The wiring instructions for the relevant interface must be observed when wiring the device.
- Any generally applicable regulations and standards must be fulfilled.

CAUTION



Device condensation

If the device is or was exposed to climatic changes (temperature fluctuation, air humidity) moisture can form on or in the device (device condensation). In this case, there is a risk of short-circuit.

- The device must **not** be switched on when device condensation is present.
- If condensation is present on the device, or if it was exposed to temperature fluctuations, it must be allowed to adjust to room temperature (do not expose the device to the direct heat of heating devices) prior to commissioning.

1 Check the device for damage in transit.

The device must only be installed and commissioned in perfect technical condition and in compliance with this document.

2 Mount the device in the control cabinet, control panel or the control desk. See Chapter 5.4.1 Mounting the device, 46.

3 Connect the device as required.
- Follow the instructions on wiring the relevant interface. See Chapter 5.3 Interfaces, 23.

The device is not provided with an On/Off switch. If the power supply is not provided with a switch, the device will start up (boot) as soon as it is connected to the power supply.

5.4.1 Mounting the device

Eight retaining brackets with a threaded pin each are required for mounting in accordance with IP65 / NEMA 4X and for use in potentially explosive atmospheres. If needed, please order additional retaining brackets with threaded pins from your supplier.

1 Select the mounting position of the device as described in Chapter 5.2.2 Requirements for the mounting position, 22.

2 Prepare a mounting cutout for the device at the selected position:
- Mounting cutout:
  - 5.7" devices: 198 × 142 mm (±1 mm)
  - 8.4" devices: 261 × 194 mm (±1 mm)
  - 10.4" devices: 329 × 238 mm (±1 mm)
- Material thickness at the mounting cutout 2…5 mm

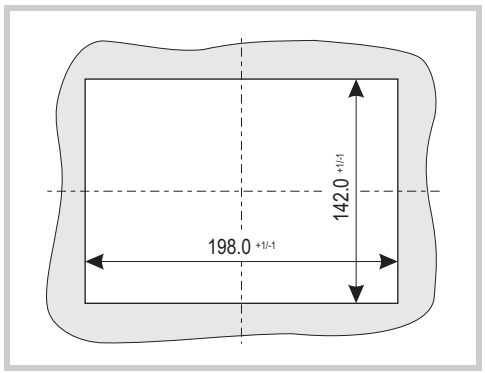

Abb. 23 Mounting cutout for 5.7" devices

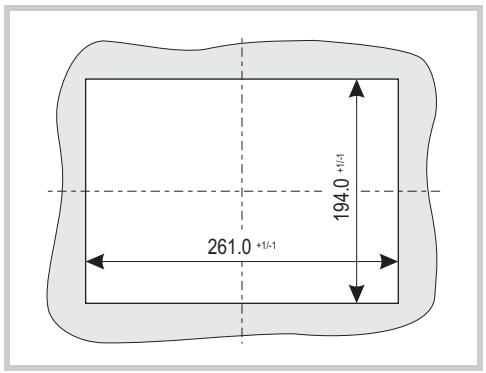

Abb. 24 Mounting cutout for 8.4" devices

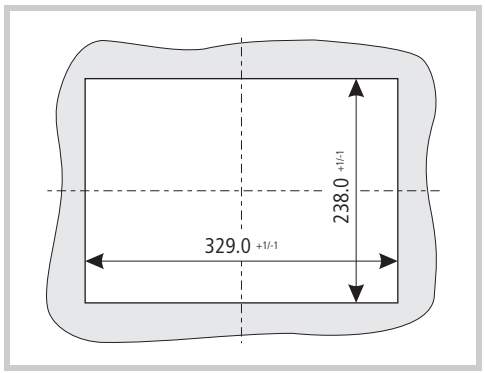

Abb. 25 Mounting cutout for 10.4" devices

3 If no sealing strip is glued in the groove (A) on the rear of the device front plate, insert the sealing strip supplied in the groove (A) and cut it so that the join is tight.

CAUTION

Poor sealing

Poor sealing resulting from the twisting of the sealing strip or due to a gap between the ends of the sealing strip.

- The join of the sealing strip must be positioned on the bottom of the device.
- Do **not** twist the sealing strip when it is inserted.
- Cut the sealing strip to a suitable length so that the join is tight.



Abb. 26 Groove for sealing strip (A)

4 Fit the supplied threaded pins in the retaining brackets beforehand.



Abb. 27 Threaded pin pre-fitted in a retaining bracket

5 Fit the device from the front into the mounting cutout.

6 Clip on the retaining brackets in the recesses provided for them on the device as shown below and fix the device by tightening the threaded pins until the front of the MICRO PANEL is flush with the surface of the control cabinet at the fixing points.

CAUTION

Mechanical damage to the device

Tightening the threaded pins too tightly may damage the device.

- Tighten threaded pins with a max. tightening torque of 0.2 Nm.

The positions of the retaining brackets depend on the mounting requirements.

- Standard mounting:
  - Top and bottom of the device:
    Fit one retaining bracket each at the left and right fixing position



Abb. 28 Devices with four retaining brackets (do not meet IP65 / NEMA 4X requirements)

- Devices which must be mounted in accordance with IP65 / NEMA 4X or used in potentially explosive atmospheres:
  - Top and bottom of the device:
    One retaining bracket at each of the fixing positions (left, right and in the center)
  - Left and right on the device:
    One retaining bracket each at the central fixing position

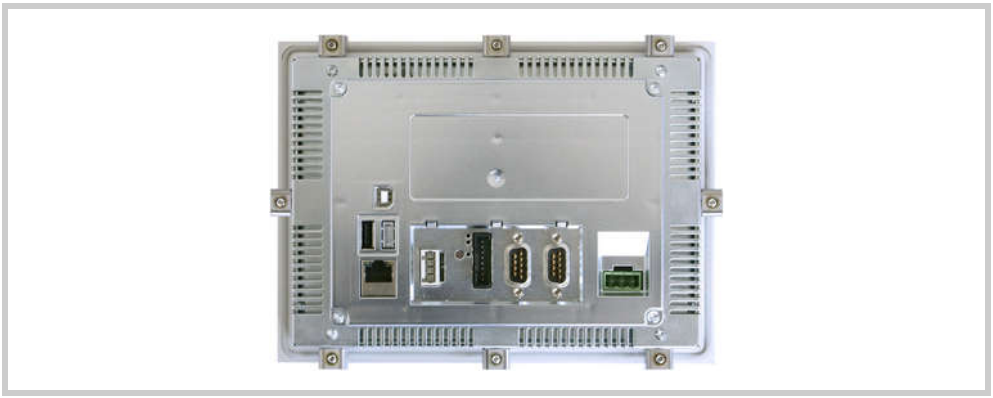

Abb. 29 Devices with eight retaining brackets (meet IP65 / NEMA 4X requirements)

6 Operation

6.1 Safety regulations

Read Chapter 3 Safety regulations, 11 before working with the device. This contains important information for your personal safety.

CAUTION



Sensitive resistive touch surface

Damage to the resistive touch due to the use of pointed or sharp objects.

- Only activate the resistive touch with your finger or a stylus.
- When wearing gloves, ensure that these are clean. They must not be covered with abrasive dust or sharp particles.

CAUTION



Device condensation

If the device is or was exposed to climatic changes (temperature fluctuation, air humidity) moisture can form on or in the device (device condensation). In this case, there is a risk of short-circuit.

- The device must **not** be switched on when device condensation is present.
- If condensation is present on the device, or if it was exposed to temperature fluctuations, it must be allowed to adjust to room temperature (do not expose the device to the direct heat of heating devices) prior to commissioning.

6.2 Starting the device

1 Energize the device.
   - The device will boot.
2 If the device does not boot up and/or if an error message appears while starting (booting) the device, see Chapter 7.4 Troubleshooting, 56.
3 Complete the following steps after initial commissioning
(→ Document «MN05010007Z-EN System Description Windows CE»):
   - **3.1** Adjust the system settings of the device.
   - **3.2** Install the required application programs.

The lifespan of the backlight can be increased by reducing the brightness (→ Document «MN05010007Z-EN System Description Windows CE»).

6.3 Switching off the device

1 De-energize the device.

6.4 Inserting and removing an SD card

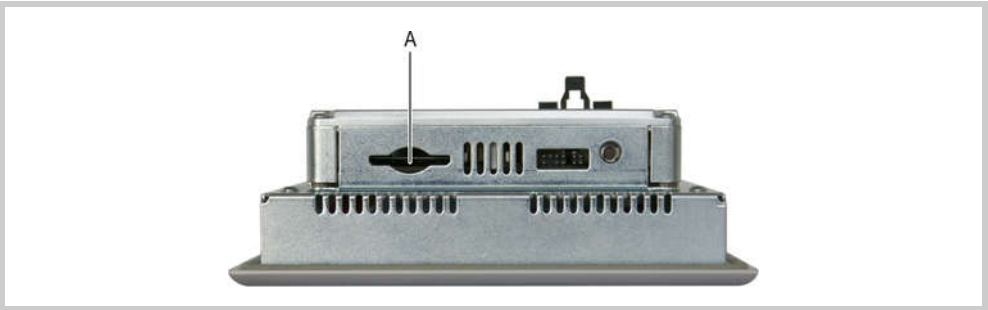

Abb. 30 SD slot (A)

CAUTION

Data loss

During a write operation, the SD card may lose data or may be destroyed if it is removed or if there is a power failure.

- ▶ Only insert the SD card when the device is in a de-energized state.
- ▶ Avoid write operations to SD cards. Reasons:
  - The number of write cycles possible on SD cards is limited.
  - A power failure during write operations will most likely lead to loss of data.
- ▶ Only remove the SD card when the device is in a de-energized state.
- ▶ Before switching off, ensure that no software write operations to the SD card are in progress.

Do not apply any force (SD cards are protected against reverse insertion).

Inserting the SD card

1 Push the SD card into the SD slot (A) until it snaps into position.

Removing the SD card

1 Push the SD card in the SD slot (A) all the way in.
   - ■ This releases the lock mechanism and the SD card comes out of the SD slot a little.

2 Remove the SD card from the SD slot.

7 Maintenance and service

7.1 Safety regulations

Read Chapter 3 Safety regulations, 11 before working with the device. This contains important information for your personal safety.

7.2 Maintenance

Devices with resistive touch are maintenance-free. However, the following work may be necessary:

- Cleaning of the resistive touch if contaminated.
- Recalibration of the resistive touch if it does not respond correctly to touch operation.

7.2.1 Cleaning the resistive touch

CAUTION



Cleaning the device

Damage to the device due to the use of pointed or sharp objects or by liquids.

- ▶ Do not use any pointed or sharp objects (e.g. knife) for cleaning.
- ▶ Do not use any aggressive or abrasive cleaning agent or solvent.
- ▶ Avoid any liquid entering the device (risk of short-circuit).

1 Clean the resistive touch carefully with a clean, soft, damp cloth.
- With stubborn contamination, spray a little cleaning agent onto the damp cloth first.

7.2.2 Recalibrating a resistive touch

The resistive touch is already calibrated when delivered. However, it must be recalibrated if it does not respond correctly to touch operation. Touch calibration, see Document «MN05010007Z-EN System Description Windows CE».

7.2.3 Battery

The integrated battery cannot be exchanged. Lifespan, see Chapter 9.4 System, 🗎 63.

7.3 Service

7.3.1 Repairs

The device must only be opened by the manufacturer or by an authorized repair center.

Contact your local supplier or Eaton technical support for repairs.

Only the original packaging should be used for transporting the device.

7.4 Troubleshooting

Fault and possible cause	Corrective action
Device does not start (boot).	
Power supply interface does not have any power.	Check the power supply cable.
While the device is starting (booting), the following message appears:	
«<50> Touch is dirty or defect» (only appears if GALILEO is installed)	
Resistive touch is not correctly calibrated.	■ Start (boot) the device. ■ Calibrate touch (→ Document «MN05010007Z-EN System Description Windows CE»).
The threaded pins for mounting the device have been tightened too much.	Loosen the threaded pins (observe max. torque, → Chapter 5.4.1, 🗎 46).
Device is faulty.	Send in your device for repair.
Display remains or becomes dark.	
Backlight is switched off.	Check the function in the visualization software.
Backlight is faulty.	Send in your device for repair.
Touch does not react or does not react correctly to touch operation.	
Resistive touch is not correctly calibrated.	■ Start (boot) the device. ■ Calibrate touch (→ Document «MN05010007Z-EN System Description Windows CE»).
Touch is deactivated.	■ Start (boot) the device. ■ Activate touch (→ Document «MN05010007Z-EN System Description Windows CE»).
The icon  appears in the taskbar.	
Incorrect operation of the operating elements on the display.	Remove all objects from the area of the display.
The threaded pins for mounting the device have been tightened too much.	Loosen the threaded pins (observe max. torque, → Chapter 5.4.1, 🗎 46).
Device is faulty.	Send in your device for repair.

Tab. 25 Troubleshooting

8 Storage, transport and disposal

8.1 Safety regulations

Read Chapter 3 Safety regulations, 🗎 11 before installing and commissioning the device. This contains important information for your personal safety.

8.2 Storage

The ambient conditions for storage must be fulfilled. See Chapter 9.9 Ambient conditions, 🗎 69.

8.3 Transport

Damage to the device must be prevented during transport (use an appropriate packaging).

The ambient conditions must be fulfilled even when the device is transported. See Chapter 9.9 Ambient conditions, 🗎 69.

1 Check the device on arrival for damage in transit.

8.4 Disposal

⚠ DANGER



Explosive and toxic materials

Any improper handling causes a risk of explosion due to the lithium battery soldered in the device.

▶ Dispose of the device properly.

Devices that are no longer used must be properly disposed of in accordance with the applicable national regulations or returned to the manufacturer or sales office.

Materials used in the device

Component	Material
Housing	Galvanized sheet steel
Front plate	Aluminum, Peraluman 101 anodized
Back plate	PC-GF
Resistive touch back panel	Glass with polyester foil
Battery	Lithium CR 2032, 3.0 V, 220 mAh, Panasonic
■ Battery weight	3.4 g
■ SVHC Substance	1.2-dimethoxyethane: ethylene glycol dimethyl ether (EGDME)
■ Substance weight	2-4 %
Electronic components	Various

Tab. 26 Materials used in the device

☞ **The materials used for our housings are halogen-free.**

Materials used in the packaging

Packaging	Material
External packaging	Cardboard
Internal packaging	■ Cardboard with PE foil ■ Plastic bag: Polyethylene (PE)

Tab. 27 Materials used in the packaging

9 Technical data

9.1 Dimensions and weights

9.1.1 5.7" devices

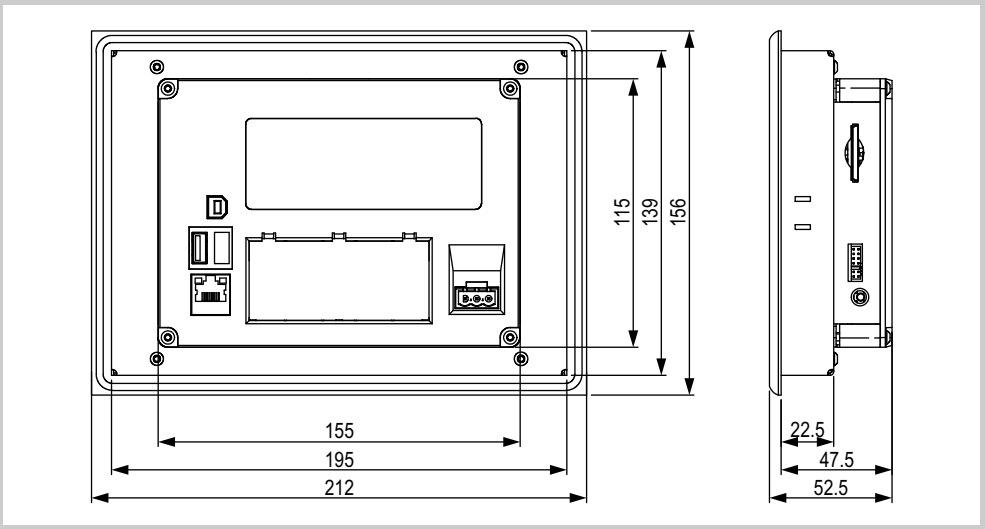

Abb. 31 Mechanical dimensions of the 5.7" devices in mm

Property	XV-152 5.7"
Height	156 mm
Width	212 mm
Depth	52.5 mm
Thickness of front plate	5 mm
Mounting depth	47.5 mm
Mounting cutout	198 mm × 142 mm (±1 mm)
Weight	Approx. 1.3 kg

Tab. 28 Dimensions and weights of the 5.7" devices

9.1.2 8.4" devices

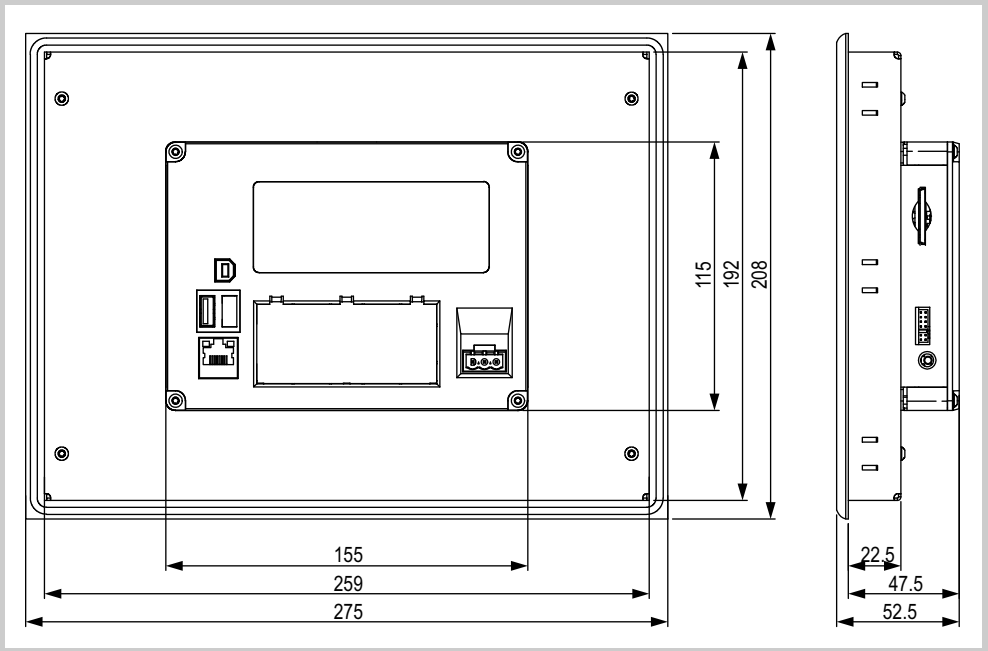

Abb. 32 Mechanical dimensions of the 8.4" devices in mm

Property	XV-152 8.4"
Height	208 mm
Width	275 mm
Depth	52.5 mm
Thickness of front plate	5 mm
Mounting depth	47.5 mm
Mounting cutout	261 mm × 194 mm (±1 mm)
Weight	Approx. 2.1 kg

Tab. 29 Dimensions and weights of the 8.4" devices

9.1.3 10.4" devices

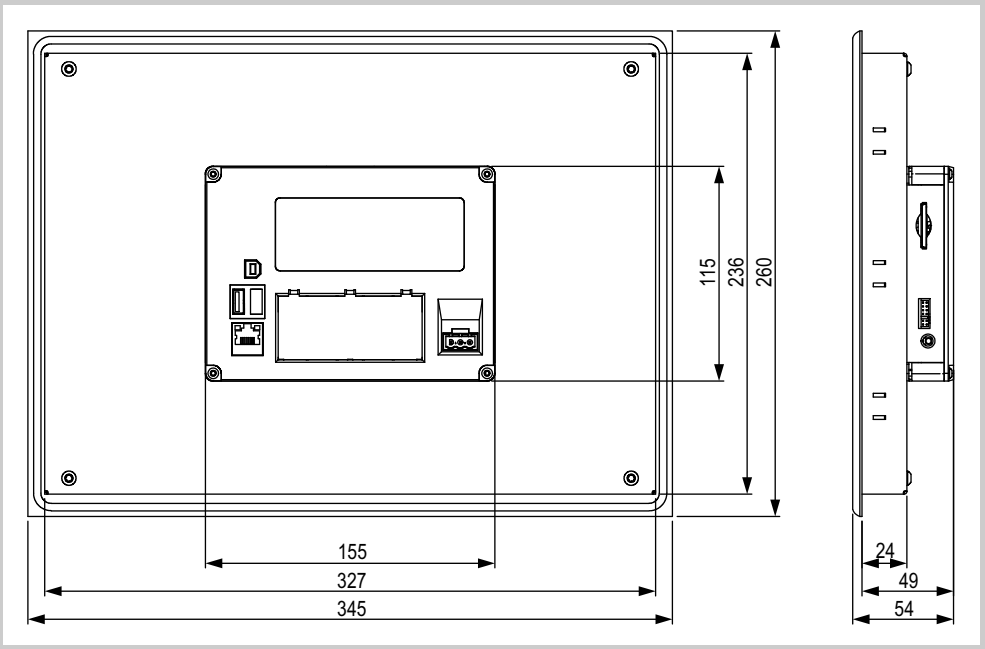

Abb. 33 Mechanical dimensions of the 10.4" devices in mm

Property	XV-152 10.4"
Height	260 mm
Width	345 mm
Depth	54 mm
Thickness of front plate	5 mm
Mounting depth	49 mm
Mounting cutout	329 mm × 238 mm (±1 mm)
Weight	Approx. 3.0 kg

Tab. 30 Dimensions and weights of the 10.4" devices

9.2 Display

Property	XV-152
Type	TFT-LCD
Resolution (W × H)	VGA (640 × 480 pixels)
Visible display area	
5.7" devices	115 mm × 86 mm (5.7" screen diagonal)
8.4" devices	170 mm × 128 mm (8.4" screen diagonal)
10.4" devices	211 mm × 158 mm (10.4" screen diagonal)
Color resolution	64k colors
Contrast ratio	Normally 300:1
Brightness	Normally 350 cd/m^2
Backlight	
Technology	LED
Dimmable via software	
5.7" devices	100 % … 3 % brightness
8.4" devices	100 % … 1 % brightness
10.4" devices	100 % … 1 % brightness
Lifespan	Normally 40 000 h
Resistive touch back panel	Touch sensor (glass with foil)

Tab. 31 Display

9.3 Touch sensor

Property	XV-152
Type	Resistive touch
Technology	4-wire

Tab. 32 Touch sensor

9.4 System

Property	XV-152
Processor	RISC, 32-bit, 400 MHz
Internal memory	
DRAM	64 MByte
NAND Flash	64 MByte
NVRAM	125 KByte
NOR Flash	2 MByte
External memory	
SD memory card slot	1× SDA specification 1.00 Suitable for SD cards (**not** for SDHC cards or cards of newer standard) Use only original accessories.
Real-time clock (battery backup)	
Battery type	CR2032 (190 mA/h), maintenance-free (soldered)
Backup time in de-energized state	Normally 10 years

Tab. 33 System

9.5 Interfaces

Property	XV-152
Ethernet	100Base-TX / 10Base-T
USB Device	USB 2.0, not electrically isolated
Interfaces, depending on the device version:	
USB Host	USB 2.0 (1.5 / 12 / 480 MBit/s), not electrically isolated
SmartWire-DT Master	SmartWire-DT, not electrically isolated → Chapter 9.5.2, 🗎 65
RS232 (System Port)	RS232, not electrically isolated
CAN	CAN, not electrically isolated
Profibus	Profibus, not electrically isolated, max. 1.5 Mbit/s
RS485	RS485, not electrically isolated
Power supply	→ Chapter 9.5.1, 🗎 64
DIAG	Only for service tasks
Jumper UPD/RUN	Only for service tasks

Tab. 34 Interfaces

9.5.1 Power supply

Property	XV-152
Rated voltage	24 VDC SELV (safety extra low voltage)
Permissible voltage	■ RMS value: 19.2 … 30.0 VDC (rated voltage -20 % / +25 %) ■ Absolute with ripple: 18.0… 31.2 VDC ■ Battery operation: 18.0… 31.2 VDC (rated voltage -25 % / +30 %) ■ 35 VDC for a period < 100 ms
Voltage dips	■ 10 ms from rated voltage (24 VDC) ■ 5 ms from undervoltage (20.4 VDC)
Power consumption	
5.7" devices	
Basic device	Max. 7 W
USB stations on USB host	Max. 2.5 W
Total	Max. 9.5 W
8.4" and 10.4" devices	
Basic device	Max. 12 W
USB stations on USB host	Max. 2.5 W
Total	Max. 14.5 W
Current consumption	
Continuous current	
5.7" devices	Max. 0.4 A (24 VDC)
8.4" and 10.4" devices	Max. 0.6 A (24 VDC)
Starting current inrush	1.5 A^2s
Protection against reverse polarity	Yes
Fuse	Yes (replacement only by the manufacturer or by an authorized repair center)
Potential isolation	No

Tab. 35 Power supply

9.5.2 SmartWire-DT Master

9.5.2.1 POW/AUX (power supply interface for SmartWire-DT)

Property	XV-152
Supply voltage U_{Aux} (control voltage for contactor coils)	
Operating voltage	
Rated voltage	24 VDC
Permissible voltage	RMS value: 20.4…28.8 VDC (rated voltage -15 % / +20 %)
Input voltage residual ripple	Max. 5 %
Protection against reverse polarity	Yes
Current	
In accordance with DIN VDE 0641, Part 11 and IEC/EN 60898	Max. 3 A[1)]
In accordance with UL 508 and CSA-22.2, No. 14	Max. 2 A[1)]
Short-circuit strength	No, external protection required (e. g. FAZ Z3, → Chapter 5.3.8.3, 34)
Power loss	Normally 1 W
Potential isolation	No
Rated operating voltage of 24 VDC slaves	Normally U_{Aux} - 0.2 V
Supply voltage U_{Pow} (for SmartWire-DT slaves)	
Supply voltage	
Rated voltage	24 VDC
Permissible voltage	RMS value: 20.4…28.8 VDC (rated voltage -15 % / +20 %)
Input voltage residual ripple	Max. 5 %
Protection against reverse polarity	Yes
Current	Max. 0.7 A
Overload proof	Yes
Inrush current and length	12.5 A/6 ms
Power loss at 24 VDC	1.0 W
Potential isolation between U_{Pow} and 15 V SmartWire-DT supply voltage	No
Bridging voltage dips	10 ms

Property	XV-152
Repetition rate	1 s
Status indication	Yes (LEDs)

Tab. 36 POW/AUX (power supply interface for SmartWire-DT)

1) If contactors and/or motor starters with a total power consumption > 3 A (DIN VDE 0641, Part 11 and IEC/EN 60898) or > 2 A (UL 508 and CSA-22.2, No. 14) are connected, a power feeder module EU5C-SWD-PF1 or EU5C-SWD-PF2 has to be used.

9.5.2.2 SWD (SmartWire-DT interface)

Property	XV-152
SmartWire-DT supply voltage U_{VP}	
Rated operating voltage (internally transformed supply voltage U_{Pow})	14.5 VDC ±3 % (14.0…15.0 VDC)
Current	Max. 0.7 A[1)]
Short-circuit strength	Yes
Number of SmartWire-DT slaves on the SmartWire-DT netwerk	Max. 99
Address setting of the SmartWire-DT slaves	Automatic
Baud rate	■ 125 Kbit/s ■ 250 Kbit/s

Tab. 37 SWD (SmartWire-DT interface)

1) If SmartWire-DT slaves with a total power consumption > 0.7 A are connected, a power feeder module EU5C-SWD-PF2 has to be used.

9.6 Enclosure ratings

Property	XV-152
Front	IP65, Enclosure Type 4X (indoor use only) Required number of retaining brackets and threaded pins for mounting: ■ 8 pieces each
Rear	IP20, Enclosure Type 1

Tab. 38 Enclosure ratings

9.7 Agency approvals and standards

Property	XV-152
EMC	2004/108/EC
Explosion protection	II 3D Ex tc IIIC T70°C IP6x (ATEX 94/9/EC): ■ Zone 22, category 3D[1)] Required number of retaining brackets and threaded pins for mounting: - 8 pieces each
UL	Devices delivered with a glued in seal: UL 508, file no. E205091 Required number of retaining brackets and threaded pins for mounting: ■ 8 pieces each

Tab. 39 Agency approvals and standards

1) Zone 22, category 3D:
- IP5x for devices of the group IIIB (non-conductive dust)
- IP6x for devices of the group IIIC (conductive dust)

9.8 Applicable standards and regulations

Property	XV-152
EMC (in relation to CE)	
IEC/EN 61000-6-2	Immunity for industrial areas
IEC/EN 61000-6-4	Emission for industrial environments Devices meeting this standard may not be used in residential areas.
IEC/EN 61000-6-3 (Not valid for devices with SmartWire-DT Master interface) All devices without cables plugged in to the interfaces USB-host and USB-device.	Emission for residential, commercial and light-industrial environments Ethernet cable with double loop through ferrite core. See Abb. 34 below.
Explosion protection (in relation to CE)	
ATEX 94/9/EC: Zone 22, Category 3D (II 3D Ex tc IIIC T70°C IP6x):	
IEC/EN 60079-0	Explosive atmospheres: equipment - general requirements
IEC/EN 60079-31	Explosive atmospheres: equipment dust ignition protection by enclosure «t»
Safety	
IEC/EN 60950	Safety of information technology equipment
UL 508	Industrial control equipment (Engineering conditions of acceptability by UL, → Kapitel 5.2.1, 🗎 22)
Product standards	
EN 50178	Electronic equipment for use in power installations
IEC/EN 61131-2	Programmable logic controllers, equipment requirements and tests

Tab. 40 Applicable standards and regulations



Abb. 34 Ethernet cable with double loop through ferrite core

9.9 Ambient conditions

Property	XV-152
Temperature	
Operation	0 … 50°C
Storage / Transport	-20 … 60°C
Relative air humidity	10 … 95%, non-condensing
Vibration in accordance with IEC/EN 60068-2-6	Displacement: ■ 5…9 Hz: 3.5 mm ■ 9…60 Hz: 0.15 mm Acceleration: ■ 60…150 Hz: 2 g
Schock in accordance with IEC/EN 60068-2-27	15 g / 11 ms
Fall test	In accordance with IEC/EN 60068-2-31

Tab. 41 Ambient conditions