2018/08/17

DTK Series Temperature Controller Instruction Sheet

■ Precaution

⚠ Warning! Please comply with safety precautions in the manual. Failure to do so may cause controller or peripheral products malfunction, or even result in serious harm such as fire, electrical injury or other damages.

⚠ DANGER! Caution! Electric Shock! Do not touch the AC terminals while the power is supplied to the controller to prevent electric shock. Make sure power is disconnected while checking the unit inside.

⚠ This controller is an open-type temperature controller. Be sure to evaluate any dangerous application in which a serious human injury or serious property damage may occur.

⚠ This controller is not furnished with a power switch or fuse, therefore a switch or circuit-breaker should be provided in the application system including this unit. The switch or circuit-breaker should be nearby and easily reached by operator, and must have the mark disconnecting means for this unit.

1. Always use recommended solder-less terminals: Fork terminal with isolation (M3 screw, width is 5.8 mm). Make sure all wires are connected to the correct polarity of terminals.
2. Do not allow dust or foreign objects to fall inside the controller to prevent it from malfunctioning. Never modify or disassemble the controller. Do not connect anything to the "No used" terminals.
3. To prevent interference, keep away from high voltage and high frequency when installing. Do not install and/or use the controller in places subject to:
   (a) Dust or corrosive gases and liquid; (b) High humidity and high radiation; (c) Vibration and shock;
4. Power must be off when wiring and replacing a temperature sensor.
5. Be sure to use compensating wires that match the thermocouple types when extending or connecting the thermocouple wires.
6. Please use wires with resistance when extending or connecting a platinum resistance thermometer (RTD).
7. Please keep the wire as short as possible when wiring a platinum resistance thermometer (RTD) to the controller and please route power wires as far as possible from load wires to prevent interference and induced noise.
8. This controller is an open-type unit and must be placed in an enclosure away from high temperature, humidity, dripping water, corrosive materials, airborne dust, and electric shock or vibration.
9. Make sure power cables and signals from instruments are all installed properly before energizing the controller, otherwise serious damage may occur.
10. Do not touch the terminals in the controller or try to repair the controller when power is on, in order to prevent electric shock.
11. Wait at least one minute after power is disconnected to allow capacitors to discharge, and please do not touch any internal circuit within this period.
12. When maintaining the controller, please turn off the power first and use a dry cloth to clean the surface. Do not open the enclosure or touch the internal circuit to avoid circuit destruction or malfunction.
13. Do not use any sharp objects to press the operation buttons. It may result in button surface damage or even electrical injury when accidentally access to internal circuit.
14. Use copper conductors only.

■ Product Features

DTK series is a new temperature controller with a high cost-performance ratio. It greatly decreases development costs and time, and improves the functions of temperature control systems. With a length of only 60mm and high resolution LCD display, it is easy for operators to monitor the temperatures of any environment or occasion.

- ❖ High resolution LCD panel: High contrast and customized display graphics for user's easy understanding.
- ❖ High-speed sampling time 100ms: High-speed sampling for external temperature measurement and fast output response for performance requirements of high-precision control.
- ❖ Shortened length to 60mm: Shorten the length of the controller to reduce the installation space.
- ❖ Conform with CE international safety certification

■ Basic System Structure

DTK obtains the temperature of the controlled environment from the sensor and sending the measured data to the electronic processor. After computing and under a fixed control cycle, it proportionally sends the heating signal via different output interfaces such as relays, voltage pulse or DC currents. By providing power to the heater and raise temperature, DTK will then control the temperature variation within a specific range.

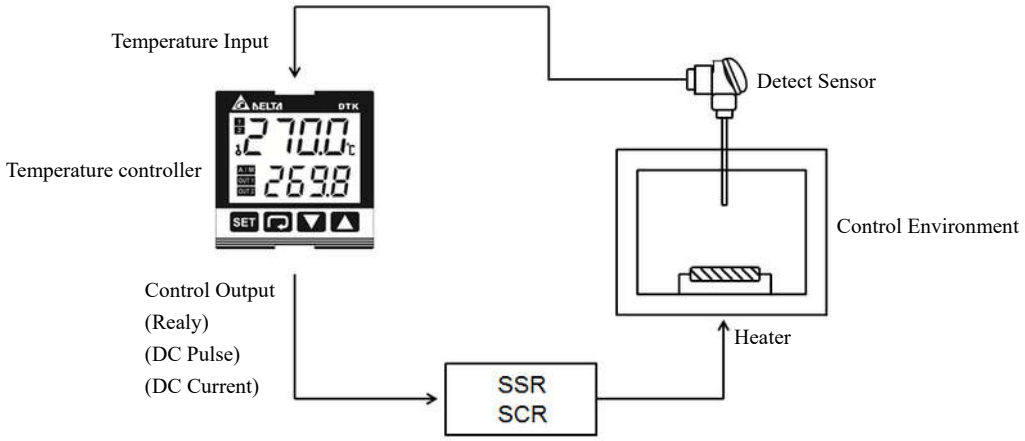

■ Display, LED & Pushbuttons



PV: Present value
SV: Set value
℃, ℉: Celsius or Fahrenheit LED
1, 2: ALM1/ALM2 alarm output LED
A/M: Auto-Tuning and manual mode LED
OUT1, OUT2: Output LED
SET : "Select" and "Set up" keys
: "Set value tuning" keys

■ Ordering Information

DTK 1 2 3 4 5 6 7

Series	DTK: Delta DTK Series Temperature Controller
1 2 3 4 Panel Size (W×H)	4848：4848 1/16 DIN W48 × H48mm 7272：7272 W72 × H72mm 4896：4896 1/8 DIN W48 × H96mm 9696：9696 1/4 DIN W96 × H96mm
5 Output options	R: Relay output, 250 VAC, 5A V: Voltage pulse output 12VDC +/-15% C: DC current output, 4 ~ 20 mA
6 Communication option	0: None 1: RS485 communication
7 Alarm option	0: None 1: 1 alarm output 2: 2 alarm output

■ Specifications

Input Voltage	AC 100 ~ 240V +/-10%, 50/60 Hz
Power Consumption	5VA max.
Display Method	LCD display.Process value (PV): Red color, Set point (SV): Green color
Sensor Type	Thermocouple: K, J, T, E, N, R, S, B, L, U, TXK
	3-wire Platinum RTD: Pt100, JPt100

	Resistance: Cu50, Ni120
Control Mode	PID, manual, and ON/OFF
Control Output	Relay output: Max. load 250VAC, 5A resistive load
	Voltage pulse output: DC 12V, Max. output current 40 mA
	Current output: DC 4 ~ 20 mA output (Load resistance: Max. 600Ω)
Alarm Output Type	Relay output: Max. load 250VAC, 3A resistive load
Display Accuracy	0 or 1 digit to the right of the decimal point (selectable)
Sampling Rate	Thermocouple or platinum resistor: 0.1 sec
Vibration Resistance	10 to 55 Hz, 10 m/s2 for 10 min, each in X, Y, and Z directions
Shock Resistance	Max. 300 m/s2, 3 times in each of 3 axes, 6 directions
Ambient Temperature	0°C ~ +50°C
Storage Temperature	-20°C ~ +65°C
Altitude	Max. 2000 m
Relative Humidity	35% ~ 80% RH (non-condensing)

■ Operation

❖ There are three modes of operation: operation, regulation, and initial setting. When power is applied, controller gets into the operation mode. Press the SET key to switch to regulation mode. If the SET key is pressed for more than 3 seconds, controller will switch to the initial setting mode. Pressing the SET key while in the regulation mode or initial setting mode forces the controller to return to the operation mode.

❖ PV/SV: Sets the temperature set point and displays the temperature process value. Use ▼ ▲ keys to set the temperature set point.

❖ Setting method: While in any function mode, press the ↻ key to select the desired function and use ▼ ▲ keys to change the settings. Press SET key to save the changes.

❖ The flow chart below shows how to switch the settings and internal functions:



Parameter Settings for Operation Mode:

Display	Description	Factory Setting
1234	Use ▼ ▲ to set temperature set point. Press ↻ to switch between display parameters.	
r-S	RUN/STOP: Control setting RUN/STOP	RUN
SP	SELECT POINT: Decimal point setting (0: integral; 1: one decimal point)	0
LoC	LOCK: Setting lock mode (LOCK1: all; LOCK2: only SV is allowed)	OFF
AL1H	ALARM1 HIGH: Upper limit alarm 1 (display according to the setting in ALARM mode)	4.0
AL1L	ALARM1 LOW: Lower limit alarm 1 (display according to the setting in ALARM mode)	4.0
AL2H	ALARM2 HIGH: Upper limit alarm 2 (display according to the setting in ALARM mode)	4.0
AL2L	ALARM2 LOW: Lower limit alarm 2 (display according to the setting in ALARM mode)	4.0
oUt1	OUT1: Display and adjust output value of 1st output group	0.0
oUt2	OUT2: Display and adjust output value of 2nd output group (display when OUT2 is set to Heating/Cooling Mode)	0.0
o1nA	OUT1 MAX.: Upper limit % of 1st output group (perform linear calculation again)	100.0
o1nL	OUT1 MIN.: Lower limit % of 1st output group	0.0
o2nA	OUT2 MAX: Upper limit % of 2nd output group (display when OUT2 is set to Heating/Cooling Mode)	100.0
o2nL	OUT2 MIN: Lower limit % of 2nd output group (display when OUT2 is set to Heating/Cooling Mode) Press ↻ to return to target temperature setting.	0.0

Parameter Settings for Initial Setting Mode:

Display	Description	Factory Setting
InPt	INPUT: Set input type (refer to "Temperature Sensor Type & Temperature Range Chart" for the selection of Thermocouple or Platinum Resistance types.)	K
tPUn	TEMP. UNIT: Set temperature unit ℃/℉	℃
tP-H	TEMP. HIGH: Set up upper temperature limit (the upper limit setting is different for different types of sensors)	1300
tP-L	TEMP. LOW: Set up lower temperature limit (the lower limit setting is different for different types of sensors)	-200
CtrL	CONTROL: Select control modes (3 different modes: ON-OFF, PID, and MANUAL)	PID
S-HC	SELECT HEAT/COOL: Select heating, cooling or dual-output heating and cooling.	H1
ALA1	ALARM1 SET: Set up Alarm 1 mode (refer to "Alarm Outputs")	0
AL1o	ALARM1 OPTION: Set up Alarm 1 options (refer to "Alarm Outputs")	0
AL1d	ALARM1 DELAY: Set up Alarm 1 delay	0
ALA2	ALARM2 SET: Set up Alarm 2 mode (refer to "Alarm Outputs")	0
AL2o	ALARM2 OPTION: Set up Alarm 2 options (refer to "Alarm Outputs")	0
AL2d	ALARM2 DELAY: Set up Alarm 2 delay	0
CoSH	COMMUNICATION WRITE: Enable/disable communication write-in	NO
C-SL	COMMUNICATION SELECT: Select ASCII or RTU format	ASCII
C-no	COMMUNICATION NO.: Set up communication address	1
bPS	BPS: Set up baudrate	9600
LEN	LENGTH: Set up data length	7
StoP	STOP: Set up stop bit	1
PrtY	PARITY: Set up parity bit Press ↻ to return to input type setting.	EVEN

Parameter Settings for Regulation Mode:

Display	Description	Factory Setting
AT	AT: Auto-tuning Switch (display when setting Ctrl = PID/RUN) Press ↻ ▽.	OFF
P	P: Proportional Setting (display when setting Ctrl = PID and TUNE = AT)	47.6
I	I: Integral Time Setting (display when Crtl = PID; this parameter is set automatically when TUNE = AT.)	260
d	D: Deviation Time Setting (display when Crtl = PID; this parameter is set automatically when TUNE = AT.)	41
PdoF	PD OFFSET: PD offset when Integral = 0 to eliminate a consistent deviation.(display when Crtl = PID; this parameter is set automatically when TUNE = AT.)	50.0
o1-S	OUT1 HYSTERESIS: Adjust Output 1 hysteresis (when in ON/OFF control)	0
o2-S	OUT2 HYSTERESIS: Adjust Output 2 hysteresis (when in ON/OFF control)	0
o1-H	OUT1 HEAT: Heating control cycle for Output 1 (when Ctrl = PID/MANUAL)	Output selection: C; V: 5 sec. R output 20 seconds
o1-C	OUT1 COOL: Cooling control cycle for Output 1 (when Ctrl = PID/MANUAL)	
o2-H	OUT2 HEAT: Heating control cycle for Output 2 (when Ctrl = PID/MANUAL)	
o2-C	OUT2 COOL: Cooling control cycle for Output 2 (when Ctrl = PID/MANUAL)	
CoEF	COEF: Ratio of Output 1 against Output 2 (when Ctrl = PID and when in dual output control)	1.00
dEAd	DEAD: Set up deadband (when Ctrl is not set to MANUAL and when in dual output)	0
Pu-F	PV FILTER: Set up input filter factor of PV	2
Pu-r	PV RANGE: Set up input filter range of PV	1.00
PuoF	PV OFFSET: Adjust input compensation of PV	0.0
PuGA	PV GAIN: Adjust input gain of PV	0.000
A1nA	ANALOG OUT1 MAX.: Adjust upper limit compensation for analog Output 1 (1 scale = 1 μA; 1 scale = 1 mV)	0
A1nL	ANALOG OUT1 MIN.: Adjust lower limit compensation for analog Output 1 (1 scale = 1 μA; 1 scale = 1 mV)	0

■ Initial Start-up Setting

When setting up DTK for the first time, press SET key for more than 3 seconds till the screen display InPt and select according to your temperature sensor type. Please be aware that incorrect selection of a model would cause PV temperature display error. (Refer to the chart below)

When setting up the temperature sensor type by using RS-485, write your value (range 0~14) into register 1004H.

● Temperature Sensor Type & Temperature Range Chart

Input Temperature Sensor Type	Register Value		Temperature Range	Input Temperature Sensor Type	Register Value		Temperature Range
Thermocouple K type	K	0	-200 ~ 1300°C	Thermocouple L type	L	8	-200 ~ 850°C
Thermocouple J type	J	1	-100 ~ 1200°C	Thermocouple U type	U	9	-200 ~ 500°C
Thermocouple T type	t	2	-200 ~ 400°C	Thermocouple TXK type	tXK	10	-150 ~ 800°C
Thermocouple E type	E	3	0 ~ 600°C	Platinum Resistance (JPt100)	JPt	11	-100 ~ 400°C
Thermocouple N type	n	4	-200 ~ 1300°C	Platinum Resistance (Pt100)	Pt	12	-200 ~ 850°C
Thermocouple R type	r	5	0 ~ 1700°C	Resistance (Ni120)	nI	13	-80 ~ 270°C
Thermocouple S type	S	6	0 ~ 1700°C	Resistance (Cu50)	Cu	14	-50 ~ 150°C
Thermocouple B type	b	7	100 ~ 1800°C				

■ Display Unit Setting

Use following parameter to change the PV and SV display unit, select decimal point and switch between ℃/℉.

- In Operation Mode parameter SP: SP = 1 displays decimal place (ex: 25.5 degree); SP = 0 displays integral number (ex: 25 degree).
- In Initial Setting Mode parameter tPUn: Select temperature display unit ℃/℉. (℉=℃* 9 / 5 + 32)

■ Set Value and Upper/Lower Limit of the Input Value

SV setting serves as reference for control.

- Set the Upper Limit of Input Value: In Initial Setting Mode parameter tP-H, the upper limit input value must be set within the range shown in the chart "Temperature Sensor Type & Temperature Range".
- Set the Lower Limit of Input Value: In Initial Setting Mode parameter tP-L, the upper limit input value must be set within the range shown in the chart "Temperature Sensor Type & Temperature Range".
- Set the SV: This parameter can be set in Operation Mode. SV value must be set within the range for upper/lower limit of the input value.

■ Digital Filter and Linear Compensation Setting

To avoid interferences on input signal that would cause instable display value, two parameters are provided below for users to set up with.

In Regulation Mode, parameters Pu-F and Pu-r can be used to adjust filter status.

- Pu-F Filter Factors (setting range = 0~50; factory setting = 2). Linear Compensation Gain Calculation equation: PV = (Last displayed PV * n + Measured Value) / (n+1).
- When the parameter value is small, the PV display is close to the Measured Value. When the parameter value is large, the PV response is slow.
- Pu-r Filter Range (setting range = 0.10~10.00℃).If factory setting = 1, it means the controller will begin Digital Filter Calcaulation when the Measured Value lies within the range of "Last displayed PV + / - 1.00℃". Therefore, it is recommended to set a larger value when noise interference is serious enough to cause large temperature oscillations.

When PV display value is different from user's expectation, Linear Compensation can be adjusted via parameters PuoF and PuGA in Regulation Mode.

- PuoF Linear Compensation Value (setting range = -99.9 ~ 99.9). Linear Compensation Gain Calculation equation: PV = Measured Value + Compensation Value.
  For example: Measure Value = 25.0; Compensation = 1.2. After applying to the Compensation equation PV = 26.2.
- PuGA Linear Compensation Gain (setting range = -0.999~0.999). Linear Compensation Gain Calculation equation: PV = Measured Value * (1 + Gain/1.000) + Compensation.
  For example: Measured Value = 25.0; Gain = 0.100. After applying to the Gain calculation equation PV = 25.0 * (1 + 0.100 / 1.000) = 27.5.

If temperature deviation is the same in every temperature, setting linear compensation value solves the deviation issue. If temperature deviation varies upon different temperatures, calculate the linear deviation error and adjust the temperature by setting Gain and Compensation value.

■ Analog Output Compensation

When the output mode is set to analog current output (4~20 mA), user's desired output value can be obtained by using compensation function. For example, the analog output 1 can be adjusted for compensation in parameters AInA and AInL in Regulation Mode. The output value can be positive or negative (+/-) and can be changed by pressing the Up/Down key on the temperature controller. The scale of each pressing is an increase or decrease of 1 uA. Ex: To change the current output range from 4~20 mA to 3.9~20.5 mA, set parameter AInA to 500. (20.5-20=0.5mA; 0.5mA/1uA= 500)

Set parameter AInL to -100. (3.9-4=-0.1mA; -0.1mA/1uA=-100)

- To control the output manually: Set parameter CtrL to mAnU in Initial Setting Mode.
- To set output to 0%: Set parameter out1 (output 1) or out2 (output 2) to 0.0 in Operation Mode.
- To adjust the lower limit of analog output: Input a desired value and check the meter to adjust the analog input value to the desired value (for example: 4~20 mA, adjusting analog value will be 4 mA). Set parameter AInL to your desired value in Regulation Mode.
- To set output to 100%: Set parameter out1 (Output 1) or out2 to 100.0 in Operation Mode.
- To adjust the upper limit of analog output: Input a desired value and check the meter to adjust the analog input value to the desired value (for example: 4~20 mA, adjusting analog value will be 20 mA). Set parameter AInA to your desired value in Regulation Mode.

■ Check Firmware Version and Output Type

When the temperature controller is ON, the PV and SV display will show firmware version, output type, and input type during the first 3 seconds.

- PV indicates the firmware version. Ex: V110 indicates firmware version V1.10.
- SV (first digit) indicates the output type of OUT1.
  N: No function, V: Voltage pulse output, R: Relay output, C: Current output
- SV (second digit) indicates the output type of OUT2. No display: No OUT2 (default), R: Relay output
- The 3rd and 4th SV digit are input types.
  K, J, T, E, N, R, S, B, L, U, TX (TXK), JP (JPT100), PT (Pt100), CU (CU50), NI (NI120)

■ Selection for Heating/Cooling/Alarm/Dual-Loop Output Control

DTK series features 1 set of Output Control (OUT1) and 1 set of Alarm Output (ALARM1), both of which are built-in. Users can also purchase a 2nd set of Alarm Output (ALARM2).

- Using 1 set of Output Control:

In Initial Setting Mode, set parameter S-HC to Heating (H1) or Cooling (C1) mode.

- Using 2nd set of Output Control:

- When the 1st set of alarm and the 2nd set of output control are used for dual output control, set parameter S-HC in Initial Setting Mode to controls such as heating (H1H2), cooling (C1C2), heating/cooling (H1C2), or cooling/heating (C1H2).

The Dead Band parameter dEAd is automatically enabled when the temperature controller is in dual output control. As shown in the diagram below, the purpose for setting the Dead Band function is to reduce waste of energy from frequent acts of heating/cooling. Ex: For example, if SV = 100 degree and dEAd = 2.0, there will be no output when the temperature is between 99~101°C.

Output of dEAd when in ON-OFF control mode (Ctrl = ON-OFF control):

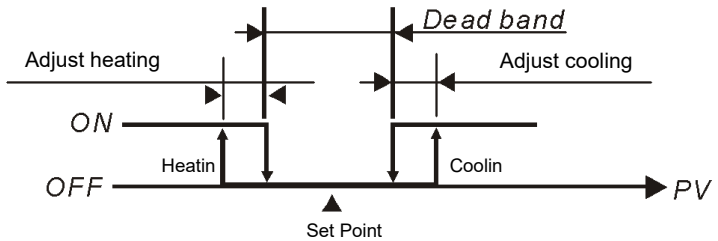

Output of dEAd when in PID control mode (Ctrl = PID):

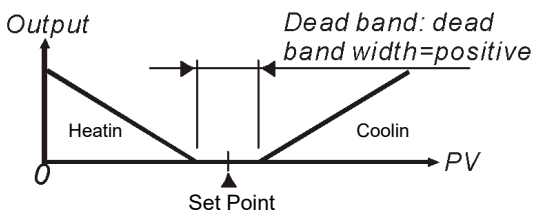

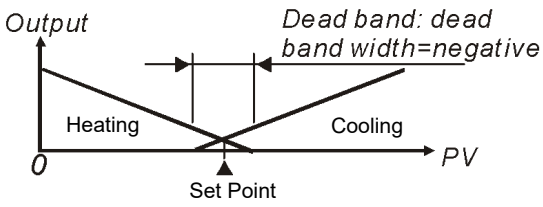

When the controller is in PID control and dual loop output mode, parameter CoEF sets the P value of the 2nd set of PID. The 1st set of PID is generated when TUNE = AT, but user can also manually set the PID value. The P value of the 2nd set of PID = the P value of 1st set of PID x CoEF. The I and D value of the 2nd set of PID remains the same as the 1st set of PID.

■ Control Mode Setting

There are 3 control modes, which are ON-OFF, PID, and MANUAL.

- **ON-OFF Mode:** For heating output, the output is off when input is greater than the setting value; output is on when input is smaller than (setting value - adjustment sensitivity setting value). For cooling output, the output is on when the input is greater than (setting value + adjustment sensitivity setting value); output is off when input is smaller than the setting value. If one of 2 outputs is set for heating and the other for cooling, a non-action zone can be set as shown in the diagram below.

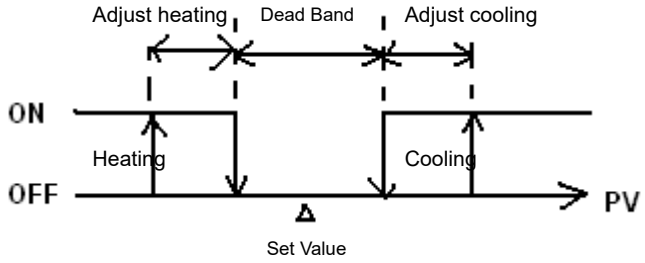

(Output ON-OFF control for both actions)

- Set parameter CtrL to onoF in Initial Setting Mode.
- Set adjustment sensitivity: Via parameter in Regulation Mode, set adjustment sensitivity o1-S (output 1), o2-S (output 2).
- Setting of Dead Band for both outputs: Set Dead Band via parameter dEAd in Regulation Mode.

- **PID Mode:** When setting for heating or cooling, the program performs PID operation via input temperature and setting temperature, with the operation result output for control of the temperature. A PID parameter and control period must be set for this function; these parameters can also be generated automatically via auto-tuning (AT).

a. Set PID parameters and the control period: PID parameters can be adjusted manually according to system characteristics or created automatically by AT. Proportional error compensation is used when I parameter is set to 0 for adjusting reduced deviation from time to reach the temperature.The Control Period is the period of PID operation, if the control period is 10 seconds, it means a PID operation is carried out every 10 seconds. The result is then output to control the temperature.If the system heats up quickly, the control period shall not be set too long. For relay output, lifespan of the relay shall be considered. A short control period will shorten the lifespan of relay.

b. Coef and DeadBand are added in the PID parameter for double output (one for heating and one for cooling). Coef refers to the ratio between the first and second portions of output (P parameter of second group = Coef*P, Coef = 0.01~99.99). DeadBand is the overlapping temperature of the P output for the first and second group.

- Set parameter CtrL to PId in Initial Setting Mode.
- To set for heating or cooling control: Select desired output control via parameter S-HC in Initial Setting Mode. If only single output control is performed, items to be selected are H1 and C1 (H for heating, C for cooling, and 1 for output 1). If dual output control is performed, the items to be selected are as follows: H1H2, C1H2,... C1C2 (H for heating, C for cooling, 1 for output 1, and 2 for output 2).
- Set control period: In Regulation Mode parameter, PV is displayed as "o'x' - 'y'". 'x' is 1 (output 1) or 2 (output 2). 'y' is H (heating) or C (cooling).
- Set double output Coef: Set Coef value via parameter CoEF in Regulation Mode.
- Setting of Dead Band for both outputs: Set Dead Band via parameter dEAd in Regulation Mode.
- Set control to running mode: Set parameter r-S to rUn in Operation Mode.
- Set AT: Set parameter AT to on in Regulation Mode. The selected number of PID sets will be adjusted automatically. After that, a PID value will be created automatically and the display will automatically alter into oFF.

Note: When performing AT, set up for the entire system must be completed, i.e. the input sensor must be wired and correctly set, and the output must be connected to a heater or cooler pipe.

- **MANUAL Mode:** Manual control function may force output of a fixed value. However, it is normally operated in combination with switchover of PID control.

a. Switch from PID control to manual control: Control output will retain the original control output before switching over to manual control. E.g., if the control output calculated by PID is 20% before the switch, then the control output is 20% after switching to manual control. You may force a fixed output value after the switch, for example, controlling the output to be 40%.

b. Switch from manual control to PID control: If manual control is 40% before switching over to PID control, the program will take this 40% after the switch-over as the initial value for calculating the PID value and then output the new control.

Note: If power of the controller is switched off under manual control mode, the original output % will be retained when the power is switched on again.

- Set parameter CtrL to nAnU in Initial Setting Mode.
- Set control period: In Regulation Mode parameter, PV is displayed as "o'x' - 'y'". 'x' is 1 (output 1) or 2 (output 2). 'y' is H (heating) or C (cooling).
- Set output %: In Operation Mode parameter, PV is displayed as "oUt'x'". 'x' is 1 (output 1) or 2 (output 2).

■ Tune Function

This control features Auto_Tuning for automatic generation of PID parameters (only applicable when control mode is set to PID control).

- Auto_Tuning: Through output of full heating or cooling, temperature is allowed for upward and downward oscillation. Obtain parameters for the magnitude and period to calculate PID parameters. In addition, save the temperature setting value obtained from performing AT, so that it could be used with PID control. After Auto_Tuning, PID control will be carried out automatically.
  - AT setting: Set parameter At to on in Regulation Mode.

■ Limits on control of output range

Maximum and minimum output can be limited. If the original maximum control output is 100% and the minimum control output is 0%, you may set the maximum control output to 80% and the minimum control output to 20%.

- Setting the upper limit of control output: Set values for parameters o1nA (output 1), o2nA (output 2) in Operation Mode.
- Setting the lower limit of control output: Set values for parameters o1nL (output 1), o2nL (output 2) in Operation Mode.

■ Limits on range of temperature

Different input sensors have different ranges of application (e.g.: J type factory setting is -100 ~ 1200 ℃). Adjust parameters tP-H (upper limit) / tP-L (lower limit) in Initial Setting Mode.

If lower limit is altered to 0 and upper limit is altered to 200, the limit function will be enabled in the following conditions:

- When setting the SV value, range for the setting will be limited to 0 ~ 200℃.
- Under ON-OFF and PID control conditions, the control output will be forced to shut off if the PV value exceeds the upper/lower limit. (Alarm output is still normal)

■ Restore Factory Settings

Lock all buttons by adjusting parameter LoC to LoC1 in Operation Mode. Press SET and ▲ keys simultaneously for 3 seconds to display PASS, and enter password 1357. The screen displays PArE (Parameter reset). Select YES and restart to restore factory settings.

■ Key Lock Function

Adjusting parameter LoC to LoC1 in Operation Mode to lock all keys. Adjusting the parameter to LoC2 allows adjustment of SV setting values.

- Unlock the key:

Press SET and ↻ keys simultaneously in LOCK mode to display KEyP parameter. Enter the password to unlock the key. Default password is 0000.

- For altering key-lock password:

1. Press ↻ key in KEyP screen to enter the change-password screen CHGP.
2. Enter the current password in CHGP screen. If the password is correct, you will be prompted to Set-New-Password screen nEuP. If the password is incorrect, the screen will return to PV/SV display mode.
3. Enter the new password two times in the nEuP screen. The screen will return to PV/SV display mode with the keys unlocked. If two entries of the password are not the same, the screen will return to the state of step 2.

- Cannot remember the password:

Restore factory settings to release the locking.

■ Alarm Outputs

This controller features one or two alarm outputs. A total of 9 alarm settings can be made independently as shown in the table. Additional settings are provided, such as alarm delay, alarm standby, alarm output hold, and alarm reverse output, as described below:

Alarm Delay Setting: Sets alarm delay time. When action conforms to the alarm setting mode, controller will delay generation of an alarm signal. An alarm will only be activated when the alarm conditions remains confirmed within the delayed period of time.

a. Alarm Standby Setting: An alarm detection will only be activated when the measured value falls within ±5 range of specified input

value, so as to prevent an alarm activation on start-up if the condition conforms to the alarm setting.

b. Alarm Output Hold Setting: The alarm message will be held when the alarm is activated, unless it is switched off on the alarm.

c. Alarm Reverse Output Setting: An alarm output can be set for NC (Normal close) or NO (Normal open).

Set Value	Alarm Type	Alarm Output Operation
0	Alarm function disabled	
1	Deviation upper- and lower-limit: This alarm output operates when PV value is higher than the setting value SV+(AL-H) or lower than the setting value SV-(AL-L).	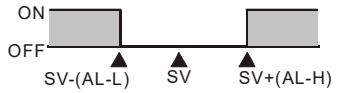
2	Deviation upper limit: This alarm output operates when PV value is higher than the setting value SV+(AL-H).	
3	Deviation lower limit: This alarm output operates when PV value is lower than the setting value SV-(AL-L).	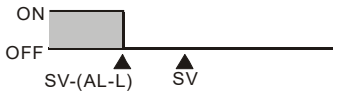
4	Absolute value upper and lower limit: This alarm output operates when PV value is higher than the setting value AL-H or lower than the setting value AL-L.	
5	Absolute value upper limit: This alarm output operates when PV value is higher than the setting value AL-H.	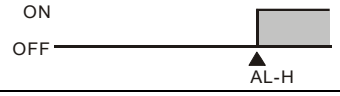
6	Absolute value lower limit: This alarm output operates when PV value is lower than the setting value AL-L.	
7	Hysteresis upper limit alarm output: This alarm output operates when PV value is higher than the setting value SV+(AL-H). This alarm output is OFF when PV value is lower than the setting value SV+(AL-L).	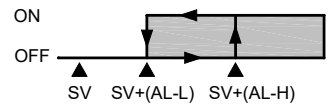
8	Hysteresis lower limit alarm output: This alarm output operates when PV value is lower than the setting value SV-(AL-H). This alarm output is OFF when PV value is higher than the setting value SV-(AL-L).	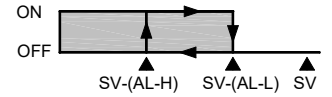
9	Disconnection Alarm: This alarm output operates if the sensor connection is incorrect or has been disconnected.	

- To set Alarm Mode: Use the parameters AL A1, AL A2 in Initial Setting Mode to select the alarm mode. There are 9 different modes (as shown in the table above).
- To set Deviation Upper Limit of Alarm: Use the parameters AL 1H, AL 2H in Operation Mode to set the deviation upper limit.
- To set Deviation Lower Limit of Alarm: Use the parameters AL 1L, AL 2L in Operation Mode to set the deviation lower limit.
- To set Alarm Delay Time (Unit: seconds): Use the parameters AL 1d, AL 2d in Initial Setting Mode to set the alarm delay time.
- To set Reverse Alarm: Use the parameters AL 1o, AL 2o in Initial Setting Mode to set value of the corresponding position Y in xxYx (when Y = 0: forward, Y = 1: reverse).
- To set Standby Alarm: Use the parameters AL 1o, AL 2o in Initial Setting Mode to set value of the corresponding position Y in xxxY (when Y = 0: normal opeartion, Y = 1: standby).
- To set Hold Alarm: Use the parameters AL 1o, AL 2o in Initial Setting Mode to set value of the corresponding position Y in xYxx (when Y = 0: normal operation, Y = 1: Hold).

Note: Refer to the table below for corresponding flags for Standby Alarm, Reverse Alarm, Hold Alarm, and Peak Alarm.

Bit3	Bit2	Bit1	Bit0
No function	Hold Alarm	Reverse Alarm	Standby Alarm

■ RS-485 Communication

1. Supported transmission speed: 2400, 4800, 9600, 19200, and 38400 bps; Communication formats not supported: 7, N, 1 or 8, E, 2 or 8, O, 2; Communication protocol: Modbus (ASCII or RTU); Function code: 03H to read contents of register (max. 8 words). 06H to write 1 (one) word into register.
2. Address and Content of Data Register:

Address	Content	Definition
1000H	Present value (PV)	Expressed by current temperature with 0.1 scale as the measuring unit, updated once every 0.1 second. The following reading value indicates occurrence of error: 8001H: Initial process (temperature value not yet obtained) 8003H: Temperature sensor is not connected. 8004H: Type of temperature sensor incorrect 8006H: Unable to obtain temperature value, ADC input error. 8007H: Unable to read/write memory
1001H	Set point (SV)	Expressed by current temperature with 0.1 scale as the measuring unit.
1002H	Upper limit of temperature range	The data content should not be higher than the temperature range.
1003H	Lower limit of temperature range	The data content should not be lower than the temperature range.
1004H	Input temperature sensor type	Please refer to “Temperature Sensor Type and Temperature Range” table for detail of the compared value.
1005H	Control method	0: PID, 1: ON/OFF, 2: Manual control
1006H	Selection for Heating/Cooling control	Refer to Output Mode Selection
1007H	1st set of Heating/Cooling control cycle	1~600, unit is 0.1 second. When the output setting = relay, the minimum control cycle is 5 second.
1008H	2nd set of Heating/Cooling control cycle	1~600, unit is 0.1 second. When the output setting = relay, the minimum control cycle is 5 second.
1009H	PB Proportional band	0.1 ~ 999.9
100AH	Ti Integral time	0~9999
100BH	Td Derivative time	0~9999
100DH	Proportional control offset error value, when Ti = 0.	0 ~ 100%, unit is 0.1%.
100EH	The setting of COEF when Dual Loop output controls are used.	0.01 ~ 99.99, unit is 0.01.
100FH	The setting of Dead Band when Dual Loop output controls are used.	No decimal points: -99 ~ 999 One decimal points: -99.9 ~ 999.9
1010H	Hysteresis setting of the 1st output group	0~999.9
1011H	Hysteresis setting of the 2nd output group	0~999.9
1012H	Read Output 1 amount	Unit is 0.1%.
1013H	Read Output 2 amount	Unit is 0.1%.
1014H	Write Output 1 amount	Unit is 0.1%. Write operation is valid only under manual tuning mode.
1015H	Write Output 2 amount	Unit is 0.1%. Write operation is valid only under manual tuning mode.
1016H	Temperature regulation value	-99.9 ~ +99.9. Unit is 0.1.
1017H	PV gain	-0.999 ~ +0.999
1018H	Control RUN/STOP setting	0: Stop, 1: Run (default)
1019H	Temperature unit display selection	0: ℉, 1: ℃
101AH	Read Button Status	b0: Loop, b1: Up, b2: Set, b3: Down, When bit=0 means press down.
101BH	Display decimal points	0: no decimal points, 1: one decimal point
101CH	Selection of communication write-in	0: Disallow (default), 1: Allow
101EH	Software version	V1.00 indicated as 0x100
1020H	Alarm 1 output mode	Please refer to “Alarm Output Selection” for detail.
1021H	Alarm 2 output mode	Please refer to “Alarm Output Selection” for detail.
1022H	AT setting	0: Stop (default), 1: Start
1023H	Setting lock status	0: no locking; 1: full locking; 2: SV adjustible.
1024H	Upper limit of alarm output 1	Please refer to “Alarm Outputs” for detail.
1025H	Lower limit of alarm output 1	Please refer to “Alarm Outputs” for detail.
1026H	Upper limit of alarm output 2	Please refer to “Alarm Outputs” for detail.
1027H	Lower limit of alarm output 2	Please refer to “Alarm Outputs” for detail.
1028H	Temperature Filter Range	Range of temperature filter: 10~1000, unit: 0.01 ℃, default: 100 (1.0 ℃)
1029H	Temperature Filter Factor	Setting range: 0~50, default: 8
102AH	Read LED Status	b1: ALM2, b2: ℃, b3: ℉, b4: ALM1, b5: OUT2, b6: OUT1, b7: AT

3. Format of Communication Transmission: Command Code, 03: read words, 06: write 1 word.

ASCII Mode

Read Command			Read Command Response			Write Command			Write Command Response		
STX	' : '	' : '	STX	' : '	' : '	STX	' : '	' : '	STX	' : '	' : '
ADR 1	'0'	'0'	ADR 1	'0'	'0'	ADR 1	'0'	'0'	ADR 1	'0'	'0'
ADR 0	'1'	'1'	ADR 0	'1'	'1'	ADR 0	'1'	'1'	ADR 0	'1'	'1'
CMD 1	'0'	'0'	CMD 1	'0'	'0'	CMD 1	'0'	'0'	CMD 1	'0'	'0'
CMD 0	'3'	'2'	CMD 0	'3'	'2'	CMD 0	'6'	'5'	CMD 0	'6'	'5'
Starting data address	'1'	'0'	Number of data (count by byte)	'0'	'0'	Starting data address	'1'	'0'	Starting data address	'1'	'0'
	'0'	'8'		'4'	'2'		'0'	'8'		'0'	'8'
	'0'	'1'	Start address data 1000H/081xH	'0'	'1'		'0'	'1'		'0'	'1'
	'0'	'0'		'1'	'7'		'1'	'0'		'1'	'0'
Number of data (word/Bit)	'0'	'0'		'F'	'0'	Data content	'0'	'F'	Data content	'0'	'F'
	'0'	'0'		'4'	'1'		'3'	'F'		'3'	'F'
	'0'	'0'	Address data 1001H	'0'			'E'	'0'		'E'	'0'
	'2'	'9'		'0'			'8'	'0'		'8'	'0'
LRC 1	'E'	'D'		'0'		LRC1	'F'	'E'	LRC1	'F'	'E'
LRC 0	'A'	'C'		'0'		LRC 0	'D'	'3'	LRC 0	'D'	'3'
END 1	CR	CR	LRC 1	'0'	'E'	END 1	CR	CR	END 1	CR	CR
END 0	LF	LF	LRC 0	'3'	'3'	END 0	LF	LF	END 0	LF	LF
			END 1	CR	CR						
			END 0	LF	LF						

LRC checksum:

LRC check is the added sum from "Address" to "Data content". For example: 01H + 03H + 10 + 00H + 00H + 02H = 16H. Then, take the complementary of 2 to get EA.

RTU Mode

Read Command			Read Command Response			Write Command			Write Command Response		
ADR	01H	01H	ADR	01H	01H	ADR	01H	01H	ADR	01H	01H
CMD	03H	02H	CMD	03H	02H	CMD	06H	05H	CMD	06H	05H
Starting data address	10H	08H	Number of data (count by byte)	04H	02H	Starting data address	10H	08H	Starting data address	10H	08H
	00H	10H					01H	10H		01H	10H
Number of data (word/bit)	00H	00H	Start address data 1000H/081xH	01H	17H	Data content	03H	FFH	Data content	03H	FFH
	02H	09H		F4H	01H		20H	00H		20H	00H
CRC 1	C0H	BBH	Address data 1001H	03H		CRC 1	DDH	8FH	CRC 1	DDH	8FH
CRC 0	CBH	A9H		20H		CRC 0	E2H	9FH	CRC 0	E2H	9FH
			CRC 1	BBH	77H						
			CRC 0	15H	88H						

CRC check code: CRC (Cyclical Redundancy Check) is obtained via the following steps.

1. Load in a 16-bit register FFFFH as the CRC register.
2. Perform an exclusive OR operation for the first byte of the data and low byte of CRC register. Place the operation result back to the CRC register.
3. Right-shift the bits in the CRC register and fill the high bits with "0". Check the lowest bit removed.
4. If the removed lowest bit is "0", repeat step 3. Otherwise, perform an exclusive OR operation for the CRC register and the value of A001H. Place the operation result back to the CRC register.
5. Repeat step 3 and 4 until the 8 bits (1 byte) are all right-shifted.
6. Repeat step 2 and 5 and calculate all the bits in the data to obtain CRC check code.

❖ Please be aware of order of transmission for the high/low bytes in the CRC register.

■ Error code

- When error occurs, you can read 1000H registers via communication. Please refer RS485 section for displaying the different error reason with hexadecimal H8001~H8007 codes.
- Panel shows error code :



: Sensor is not connected.



: Sensor type is error, the measured temperature has exceeded the usable range of the sensor.

■ Panel Cutout

Model	Panel Cutout (W * H)	Model	Panel Cutout (W * H)
4848	45mm * 45mm	7272	68mm * 68mm
4896	44.5mm * 91.5mm	9696	91.5mm * 91.5mm

- When installing the temperature controller, a certain surrounding space should be maintained (as shown below) to ensure proper cooling and easy removal of mounting accessories.
  - At least 60 mm space for upper and lower sides and 40 mm space for left and right sides.

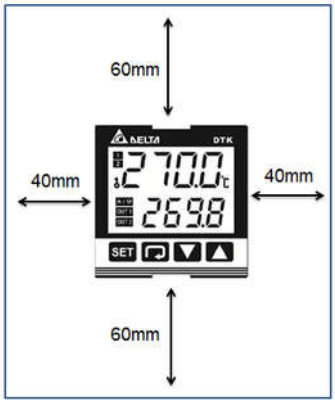

■ Mounting and Bracket Installation

4848series:

Step 1: Insert the controller through the panel cutout.

Step 2: Slide M3*0.5 nut into the opening in the top of the mounting bracket and insert the M3*0.5*30mm mounting screw in the mounting bracket. Insert the mounting bracket into the mounting groove at the right and left of the controller and push the mounting bracket forward until the bracket stops at panel wall.

Step 3: Tighten screws on bracket to secure the controller in place. (The screw torque should be 0.4 to 0.5N.m)

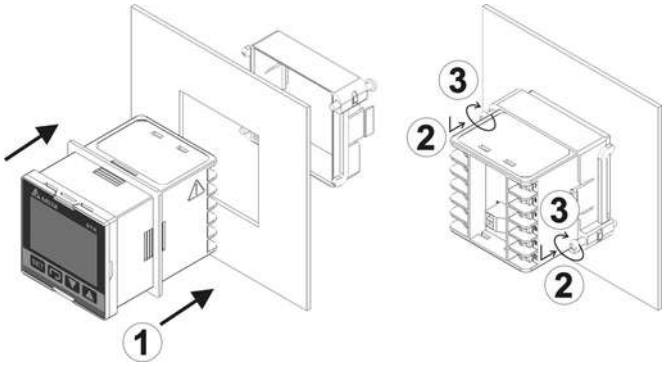

7272series:

Step 1: Insert the controller through the panel cutout.

Step 2: Slide M3*0.5 nut into the opening in the top of the mounting bracket and insert the M3*0.5*30mm mounting screw in the mounting bracket. Insert the mounting bracket into the mounting groove at the top and bottom of the controller and push the mounting bracket forward until the bracket stops at panel wall.

Step 3: Tighten screws on bracket to secure the controller in place. (The screw torque should be 0.4 to 0.5N.m)

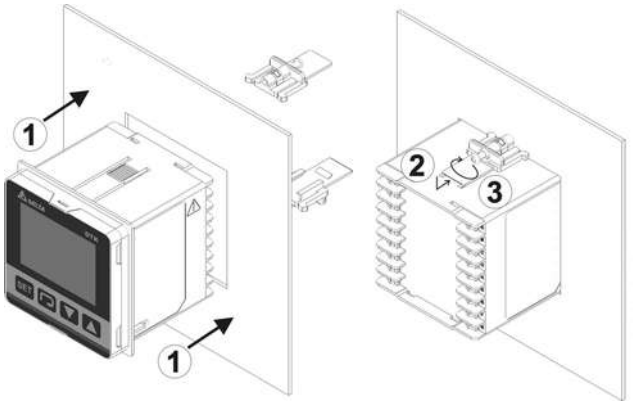

4896 series:

Step 1: Insert the controller through the panel cutout.

Step 2: Slide M3*0.5 nut into the opening in the top of the mounting bracket and insert the M3*0.5*30mm mounting screw in the mounting bracket. Insert the mounting bracket into the mounting groove at the top and bottom of the controller and push the mounting bracket forward until the bracket stops at panel wall.

Step 3: Tighten screws on bracket to secure the controller in place. (The screw torque should be 0.4 to 0.5N.m)

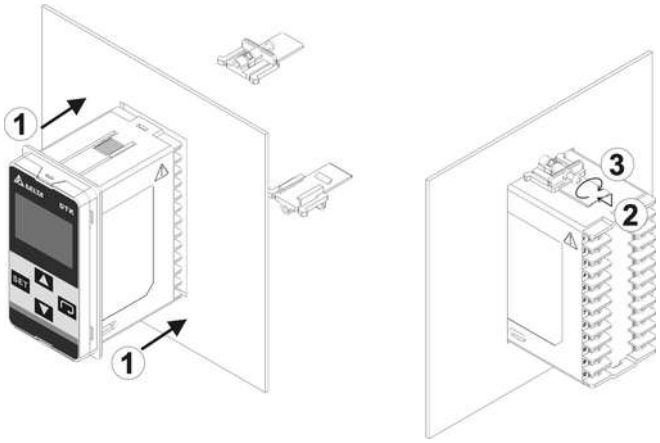

9696 series:

Step 1: Insert the controller through the panel cutout.

Step 2: Slide M3*0.5 nut into the opening in the top of the mounting bracket and insert the M3*0.5*30mm mounting screw in the mounting bracket. Insert the mounting bracket into the mounting groove at the top and bottom of the controller and push the mounting bracket forward until the bracket stops at panel wall.

Step 3: Tighten screws on bracket to secure the controller in place. (The screw torque should be 0.4 to 0.5N.m)

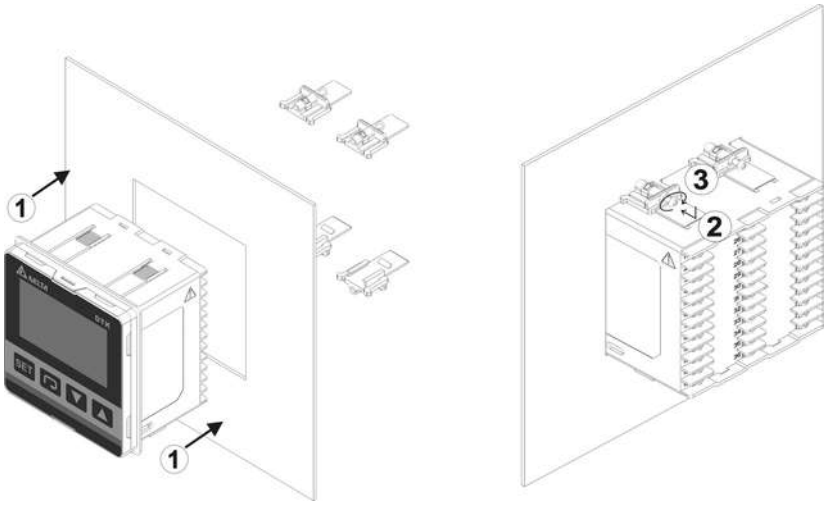

■ Wiring Diagrams and Precautions

- Tighten the screw to the torque between 0.4 and 0.5N.m.
- To avoid signal interference, it is suggested that the power cable and the signal cable to be set separately.
- Please use solid wires between 14AWG/2C and 22AWG/2C. Maximum 300V and rated temperature to 105°C for input power pins.
- The warning symbol ⚠ on the case indicated the ports for power input pins 1 and 2. If the power supply is connected to other ports, the controller will be burned, and personnel injury or fire may occur.
- Please use relay output models within the rated load. Otherwise, the cable and crimp terminal may build up heat due to overload. When the temperature exceeds 50°C, contact burning may occasionally occur.
- Please use the crimp terminal of maximum 5.8 mm.

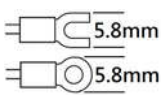

4848 series:

(1 set of alarm output)

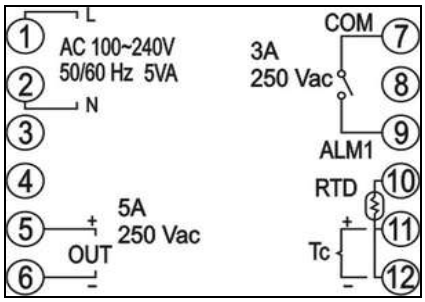

(2 sets of alarm outputs or with RS485 communication)

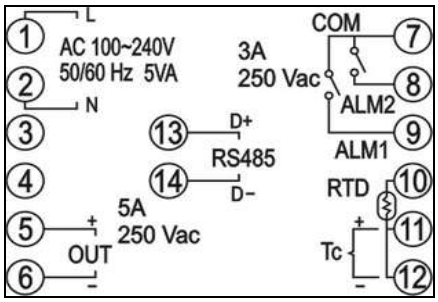

7272 series:

(1 set of alarm output)

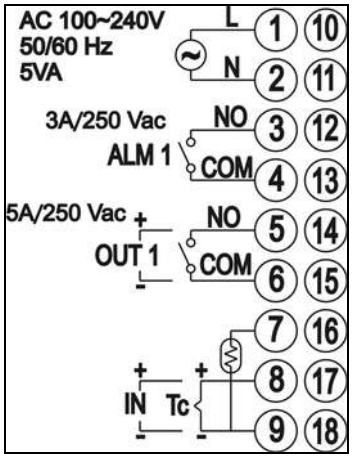

(2 sets of alarm outputs or with RS485 communication)

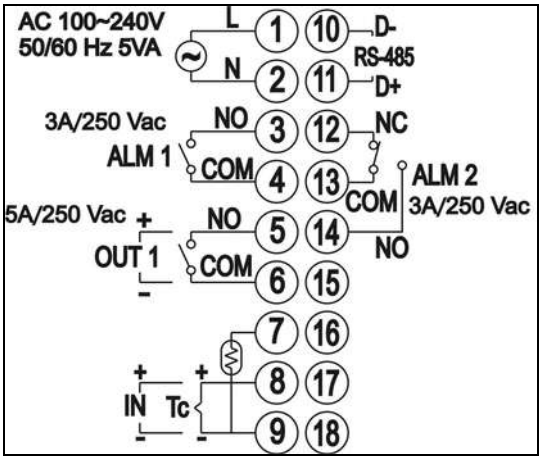

4896 / 9696 series:

(1 set of alarm output)

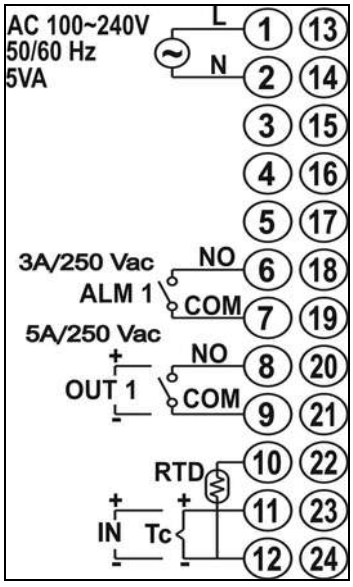

(2 sets of alarm outputs or with RS485 communication)

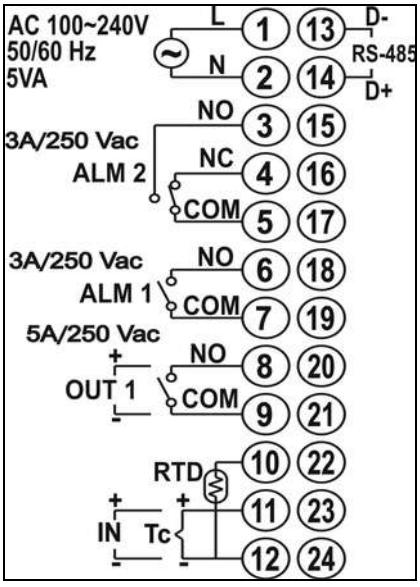

■ Prodcut Service

If you need more temperature controller information and technical support, please contact following website: http://www.deltaww.com/ to download and contact region service window.