Specification Status: Released

Maximum UL Electrical Rating

Voltage: $24V_{DC}$
Short Circuit Current: 20A

Notes:
1. All terminations are tin plated.
2. Drawing not to scale

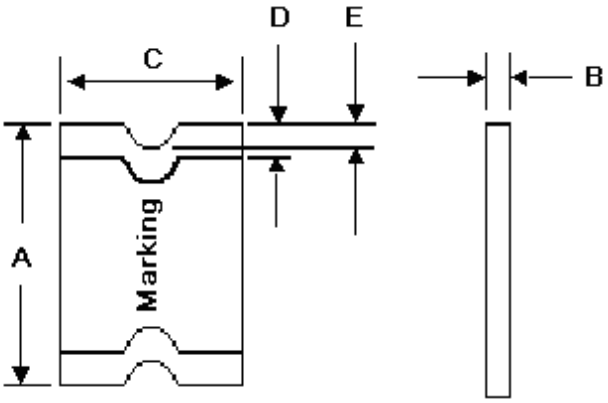

Marking:

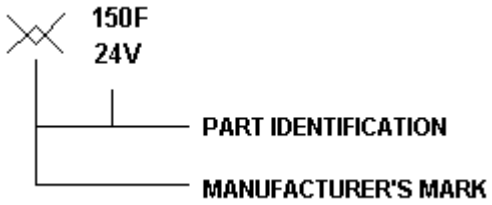

TABLE I. DIMENSIONS:

	A		B		C		D		E
	MIN	MAX	MIN	MAX	MIN	MAX	MIN	MAX	MIN
mm:	4.37	4.83	1.00	1.94	3.07	3.41	0.25	0.95	0.20
in:	(0.172)	(0.190)	(0.040)	(0.077)	(0.121)	(0.134)	(0.010)	(0.040)	(0.008)

TABLE II. PERFORMANCE RATINGS:

CURRENT RATINGS **						TIME TO TRIP **	RESISTANCE VALUES		TRIPPED-STATE POWER DISSIPATION **
AMPERES AT 0°C		AMPERES AT 20°C		AMPERES AT 60°C		SECONDS AT 20°C, 8A	OHMS AT 20°C		WATTS AT 20°C, 24V
HOLD	TRIP	HOLD	TRIP	HOLD	TRIP	MAX	MIN	MAX*	MAX
1.7	3.4	1.5	3.0	1.0	2.0	1.5	0.04	0.12	1.0

* Maximum resistance is measured 1 hour after reflow
** Values Specified were determined using PCB's with 0.070"X1.5 ounce copper traces.

Agency Recognitions:	UL, CSA, TÜV
Reference Documents:	PS300
Precedence:	This specification takes precedence over documents referenced herein.
Effectivity:	Reference documents shall be the issue in effect on the date of invitation for bid.
CAUTION:	Operation beyond the rated voltage or current may result in rupture, electrical arcing or flame.

Materials Information

ROHS Compliant — Directive 2002/95/EC Compliant

ELV Compliant — Directive 2000/53/EC Compliant

Pb-Free

Halogen Free*

* Halogen Free refers to: Br≤900ppm, Cl≤900ppm, Br+Cl≤1500ppm

© 2016 Littelfuse,Inc
Specifications are subject to change without notice.
Revised July 26,2016

Information furnished is believed to be accurate and reliable. However, users should independently evaluate the suitability of and test each product selected for their own applications. Littelfuse products are not designed for, and shall not be used for, any purpose (including, without limitation, military, aerospace, medical, lifesaving, life-sustaining or nuclear facility applications, devices intended for surgical implant into the body, or any other application in which the failure or lack of desired operation of the product may result in personal injury, death, or property damage) other than those expressly set forth in applicable Littelfuse product documentation. Warranties granted by Littelfuse shall be deemed void for products used for any purpose not expressly set forth in applicable Littelfuse documentation. Littelfuse shall not be liable for any claims or damages arising out of products used in applications not expressly intended by Littelfuse as set forth in applicable Littelfuse documentation. The sale and use of Littelfuse products is subject to Littelfuse Terms and Conditions of Sale, unless otherwise agreed by Littelfuse

© 2016 Littelfuse,Inc
Specifications are subject to change without notice.
Revised July 26,2016