VARIMETER
Motor Load Monitor
MK 9397N, MH 9397

Translation of the original instructions

0273607



MK 9397N MH 9397

Product Description

The Load monitor MK9397 and MH9397 of the varimeter family monitor reliably the load of motors as well as the function of 3 phase electrical users.
If the measured value falls under or goes over the adjusted settings the corresponding output relay is energised. To avoid unnecessary tripping a response delay t_v can be adjusted between 0 and 10 s. LEDs show the status of the output relays.

Function Diagram

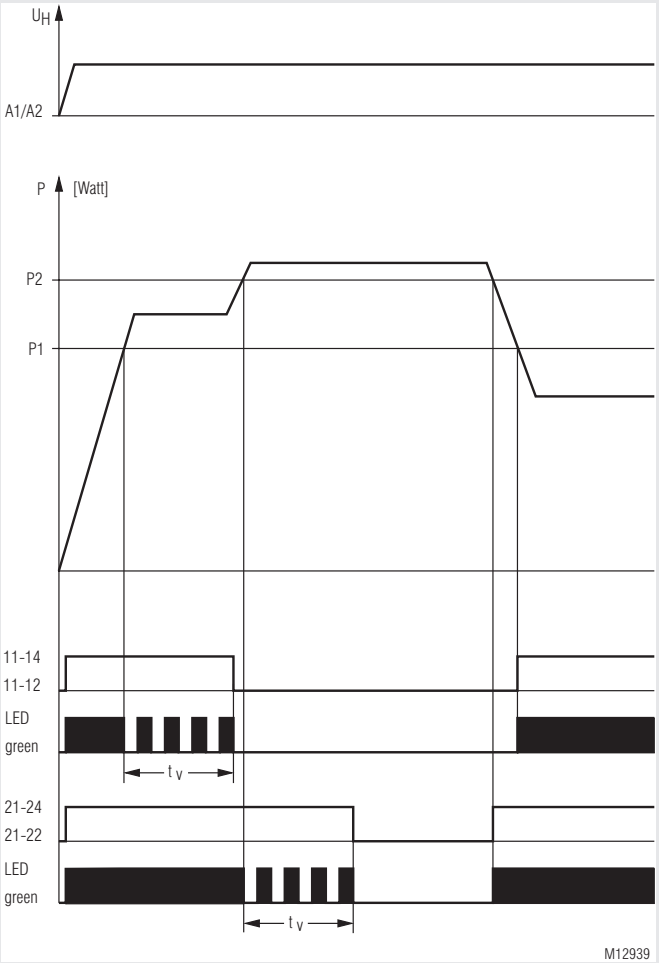

Your Advantage
- Preventive maintenance
- For a evaluate time
- Quicker fault locating
- Precise and reliable
- Overload detection, as option also with prewarning
- Can also be used for underload monitoring
- Simple adjustment and fault diagnostics
- Space and cost saving

Features
- According to EN 60255-1
- Active power measuring
- Relay output
  MK 9397N: 1 changeover contact
  MH 9397: 1 changeover contact each for overload and prewarning
- On delay
- Closed circuit operation
- As option open circuit operation
- As option with plugable terminal blocks for easy exchange of devices
  - With screw terminals
  - Or with cage clamp terminals
- MK 9397N: Width 22.5 mm
  MH 9397: Width 45 mm

Approvals and Markings

CE

Application

The load monitor is suitable to monitor industrial motors with variable load as well as to monitor the correct function of electrical users. The units can detect in time wearing or failures on machines and tools. So maintenance can be carried out before a plant stops.

Function

The load monitor monitors the effective power of electrical consumers. As the current is only measured in one phase a symmetric load in a 3 phases is assumed. as it is usual with motors. The setting value is adjusted with potentiometers, the range selection by rotational switches. The MH 9397 has 2 response values (e.g. for prewarning).

All technical data in this list relate to the state at the moment of edition. We reserve the right for technical improvements and changes at any time.

Circuit Diagrams

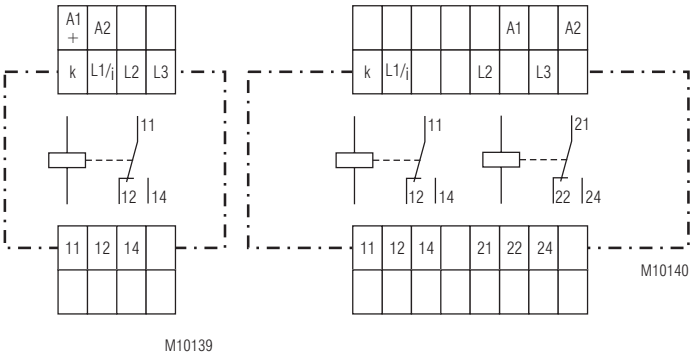

MK 9397N MH 9397

Connection Terminals

Terminal designation	Signal description
A1 / A2	Auxiliary voltage
K / L1/i	Current path (current at phase L1)
L1 / L2 / L3	Supply
11 / 12 / 14	Contacts relay 1
21 / 22 / 24	Contacts relay 2 (only at MH 9397)

Connection Notes

The unit can also be used on single phase loads. the terminals L2 and L3 have to be bridged in this case. The device also switches at the set points in the case of reverse power. Overload in the current path is indicated by fast flashing of the LEDs.

Connection

The connection has to be done according to the connection diagrams. To connect the motor current of L1 the terminals i and k are used. For current exceeding the limits of the device an additional current transformer has to be used.

Setting

2 rotational switches for P_1

Rotary switch 1: Fine adjustment

Rotary switch 2: 8 ranges adjustable:
0 ... 1 kW
1 ... 2 kW
2 ... 3 kW
⋮
7 ... 8 kW

2 rotational switches for P_2

Rotary switch 3: Fine adjustment

Rotary switch 4: 8 ranges adjustable:
0 ... 1 kW
1 ... 2 kW
2 ... 3 kW
⋮
7 ... 8 kW

Rotary switch t_v: 0 ... 10 s

Example **Response value: 5.2 kW**

Fine adjustment
(Upper rotary switch): 0.2 kW

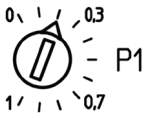

Range selection
(Lower rotary switch): 5 ... 6 kW



Indication

The LED indicate the state.

Green LED, UN:	On, when auxiliary voltage present	
Green LED, P1:	Flashes:	During time delay
	Permanently on:	Relay 1 active
(only at MH 9397)		
Green LED, P2:	Flashes:	During time delay
	Permanently on:	Relais 2 active

Overload within the current range is indicated by fast flashing of the LED.

Technical Data

Auxiliary Voltage A1 / A2

Nominal auxiliary voltage U_H:
MK 9397N: DC 24 V (0.9 ... 1.1 x U_H)
MH 9397: AC 230V (0.8 ... 1.1 x U_H)
Nominal frequency: 50 / 60 Hz
Frequency range: 45 ... 400 Hz
Input current:
At DC 24V: 50 mA
At AC 230V: 15 mA

Voltage Measuring Input L1 / L2 / L3

Nominal voltage U_N: 3 AC 400 V
Measuring range: 3 AC 12 ... 400 V

Variants without auxiliary supply get their power from the measuring input. The Voltage range of the Measuring voltage is then identical with the range of the auxiliary supply.

Current Measuring Input i / k

Nominal current I_N: AC 12 A
Measuring range: AC 100 mA ... 12 A
Max. overload
Continuously: 16 A
Short time < 10 s: Max. 25 A

Overload within the current range is indicated by fast flashing of the LED.

Nominal frequency: 50 / 60 Hz
Frequency range: 45 ... 400 Hz

Setting range (at absolute scale)

Rel 1: Fine adjustment
Range: 8 ranges 0 ... 8 kW
Rel 2: Fine adjustment
Range: 8 ranges 0 ... 8 kW
Measuring accuracy at nominal frequency (in % of setting value): ± 4 %
Hysteresis (in % of setting value): < 5 %
Time delay t_v: 0 ... 10 s adjustable
Start up delay: 500 ms fixed

Output Circuit (Rel1: 11/12/14; Rel2: 21/22/24)

Contacts
MK 9397N: 1 changeover contact for P1
MH 9397: 1 changeover contact for P1 and 1 changeover contact for P2
Thermal current I_{th}: 2 x 4 A
Switching capacity
To AC 15:
NO contacts: 3 A / AC 230 V IEC/EN 60947-5-1
NC contacts: 1 A / AC 230 V IEC/EN 60947-5-1
To DC 13: 1 A / DC 24 V IEC/EN 60947-5-1
Electrical life
at 3 A, AC 230 V cos φ = 1: 2 x 10^5 switch. cycles
Permissible switching frequency: 1800 switching cycles / h
Short circuit strength
Max. fuse rating: 4 A gG / gL IEC/EN 60947-5-1
Mechanical life: 30 x 10^6 switching cycles

Technical Data

General Data

Nominal operating mode: Continuous operation
Temperature range:
Operation: - 20 ... + 60 °C
Storage: - 20 ... + 70 °C
Altitude: ≤ 2000 m
Clearance and creepage distance
Rated impulse voltage / pollution degree: 4 kV / 2
High voltage test: IEC/EN 60664-1
Overvoltage category: III
EMC
Electrostatic discharge (ESD): 8 kV (air) IEC/EN 61000-4-2
HF irradiation
80 MHz ... 2.6 GHz: 10 V / m IEC/EN 61000-4-3
Fast transients: 2 kV IEC/EN 61000-4-4
Surge voltage between
wires for power supply: 1 kV IEC/EN 61000-4-5
Between wire and ground: 2 kV IEC/EN 61000-4-5
HF-wire guided: 10 V IEC/EN 61000-4-6
Interference suppression: Limit value class A*)
*) The device is designed for the usage under industrial conditions (Class A, EN 55011).
When connected to a low voltage public system (Class B, EN 55011) radio interference can be generated. To avoid this, appropriate measures have to be taken.
Degree of protection:
Housing: IP 40 IEC/EN 60529
Terminals: IP 20 IEC/EN 60529
Housing: Thermoplastic with VO behaviour according to UL Subject 94
Vibration resistance: Amplitude 0.35 mm frequency 10 ... 55 Hz, IEC/EN 60068-2-6
Climate resistance: 20 / 060 / 04 IEC/EN 60068-1
Wire connection DIN 46228-1/-2/-3/-4
Screw terminal
(fixed): 1 x 4 mm² solid or
1 x 2.5 mm² stranded ferruled (isolated) or
2 x 1.5 mm² stranded ferruled (isolated) or
2 x 2.5 mm² solid
Insulation of wires or sleeve length: 8 mm
Terminal block with screw terminals
Max. cross section: 1 x 2.5 mm² solid or
1 x 2.5 mm² stranded ferruled (isolated)
Insulation of wires or sleeve length: 8 mm
Terminal block with cage clamp terminals
Max. cross section: 1 x 4 mm² solid or
1 x 2.5 mm² stranded ferruled (isolated)
Min. cross section: 0.5 mm²
Insulation of wires or sleeve length: 12 $^{\pm 0.5}$ mm
Wire fixing: Plus-minus terminal screws M3,5 box terminals with wire protection or cage clamp terminals
Fixing torque: 0.8 Nm
Mounting: DIN rail IEC/EN 60715
Weight: 360 g

Dimensions

Width x height x depth:
MK 9397N: 22.5 x 90 x 99 mm
MH 9397: 45 x 90 x 99 mm

Standard Types

MK 9397N.11/010 3 AC 24 ... 400 V AC 12 A DC 24 V 10 s
Article number: 0062043
- Measuring voltage: 3 AC 24 ... 400 V
- Measuring current: AC 12 A
- Auxiliary voltage U_H: DC 24 V
- On delay: Up to 10 s
- Output: 1 changeover contact
- Width: 22.5 mm

MH 9397.12/010 3 AC 24 ... 400 V AC 12 A AC 230 V 10 s
Article number: 0062046
- Measuring voltage: 3 AC 24 ... 400 V
- Measuring current: AC 12 A
- Auxiliary voltage U_H: AC 230 V
- On delay: Up to 10 s
- Output: 1 changeover contact (Rel1) and 1 changeover contact (Rel2)
- Width: 45 mm

Ordering Example

MK 9397N .11 _ _ /010 3 AC 24 ... 400 V AC 12 A DC 24 V 10 s

- On delay
- Auxiliary voltage U_H
- Measuring current U_M
- Measuring voltage
- Type of terminals
  - Without indication: Terminal blocks fixed with screw terminals
  - PC (plug in cage clamp): Pluggableterminalblocks withcageclampterminals
  - PS (plug in screw): Pluggableterminalblocks with screw terminals
- Contacts
- Type

Options with Pluggable Terminal Blocks



Screw terminal
(PS/plugin screw)



Cage clamp terminal
(PC/plugin cage clamp)

Notes

Removing the terminal blocks with cage clamp terminals

1. The unit has to be disconnected.
2. Insert a screwdriver in the side recess of the front plate.
3. Turn the screwdriver to the right and left.
4. Please note that the terminal blocks have to be mounted on the belonging plug in terminations.

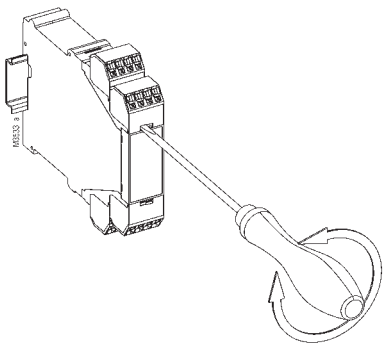

Connection Example

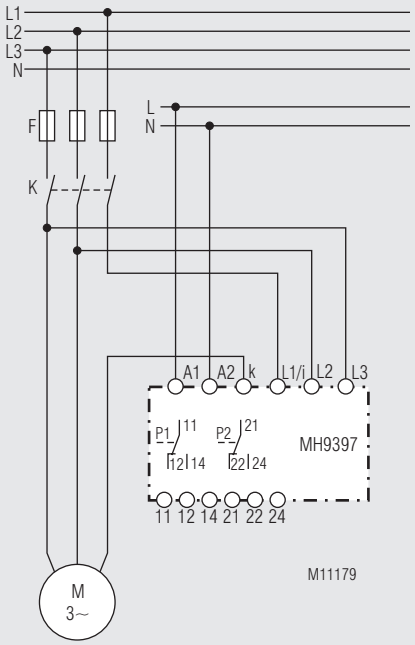

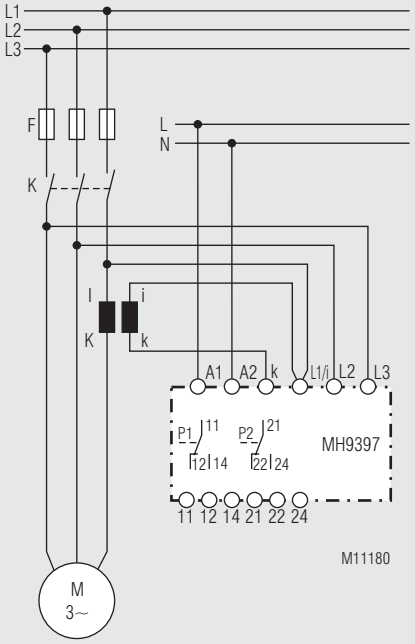

Remark:
When using external current transformers the setting values have to be multiplied with the transmission ratio ü of the current transformer.

Example: Response value = setting value (P1/P2) x ü