Bellows Couplings **HucoFlex K**

Huco Altra Industrial Motion

Bellows Coupling with removable clamp shaft connection, short version

ORDERING INFORMATION

RS PART No.	MANUFACTURER PART No.	BORES B1 & B2 [mm]
1967663	592.45.3333	11
1967664	592.45.3838	14
1967665	592.45.4646	19
1967666	592.45.4949	22



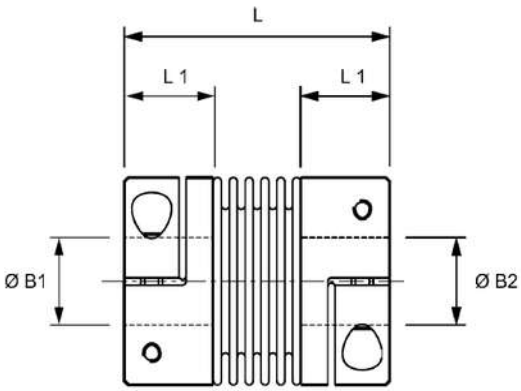

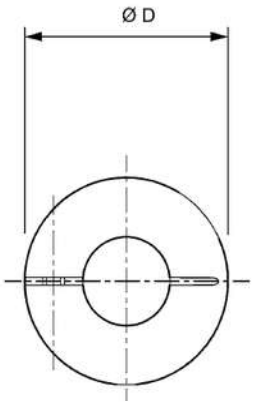

DIMENSIONS & INTERFACE DATA

Overall Diameter D [mm]	45
Overall Length L [mm]	63
Maximum permissible bore B1. B2 [mm]	25.4
Length of supported bore L1 [mm]	19.5
Fastener thread size	M5
Fastener tightening torque [Nm]	8
Coupling approx weight [g]*	100

MATERIALS

Hubs	**Aluminium alloy**
Bellows	**Spring Quality Stainless Steel**
Fasteners	**Alloy Steel**

PERFORMANCE DATA

Maximum speed [min^{-1}]	12800
Peak Torque [Nm]	18
Maximum shaft angular misalignment [deg]	1.5
Maximum shaft radial misalignment [mm]	0.2
Maximum shaft axial displacement [mm]	0.5
Torsional Stiffness [$Nm.rad^{-1}$]	20000
Radial Stiffness [N/mm]	205
Axial Stiffness [N/mm]	50

Temperature Range

-30°C to +120°C

*weight with max. bore