Cylinder accessories → Guide units, series CG1

Guide unit, GH1

► Ø 12 - 25 mm ► Plain bearing ► for standard cylinder ISO 6432

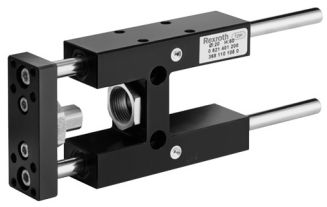

00127780

Ambient temperature min./max.	-20 °C / 80 °C
Materials:	
Bearing housings	Aluminum, black anodized
Bearing type	Sintered bronze
Carrying plate	Aluminum, black anodized
Flexible coupling in carrying plate	Stainless steel
Guide rods	Stainless steel, smooth rolled

Technical Remarks
■ Guide units for cylinder Ø 12 also fit on cylinder Ø 16

Suitable piston Ø		[mm]	12	20	25		
Weight	0 mm stroke	[kg]	0.395	0.73	0.73		
	10 mm stroke	[kg]	0.0078	0.0122	0.0122		

	Suitable piston Ø [mm] Min. play (radial) [mm]	12 1	20 1.5	25 1.5		
	Stroke 50	**0821401295**	**0821401200**	**0821401210**		
	100	**0821401296**	**0821401201**	**0821401211**		
	160	-	**0821401202**	**0821401212**		
	200	**0821401297**	**0821401203**	**0821401213**		
	250	-	**0821401204**	**0821401214**		
	400	-	**0821401205**	**0821401215**		
	600	-	0821401206	0821401216		
	800	-	0821401207	0821401217		

Guide unit, GH1

► Ø 12 - 25 mm ► Plain bearing ► for standard cylinder ISO 6432

Ø 12 - 25 mm

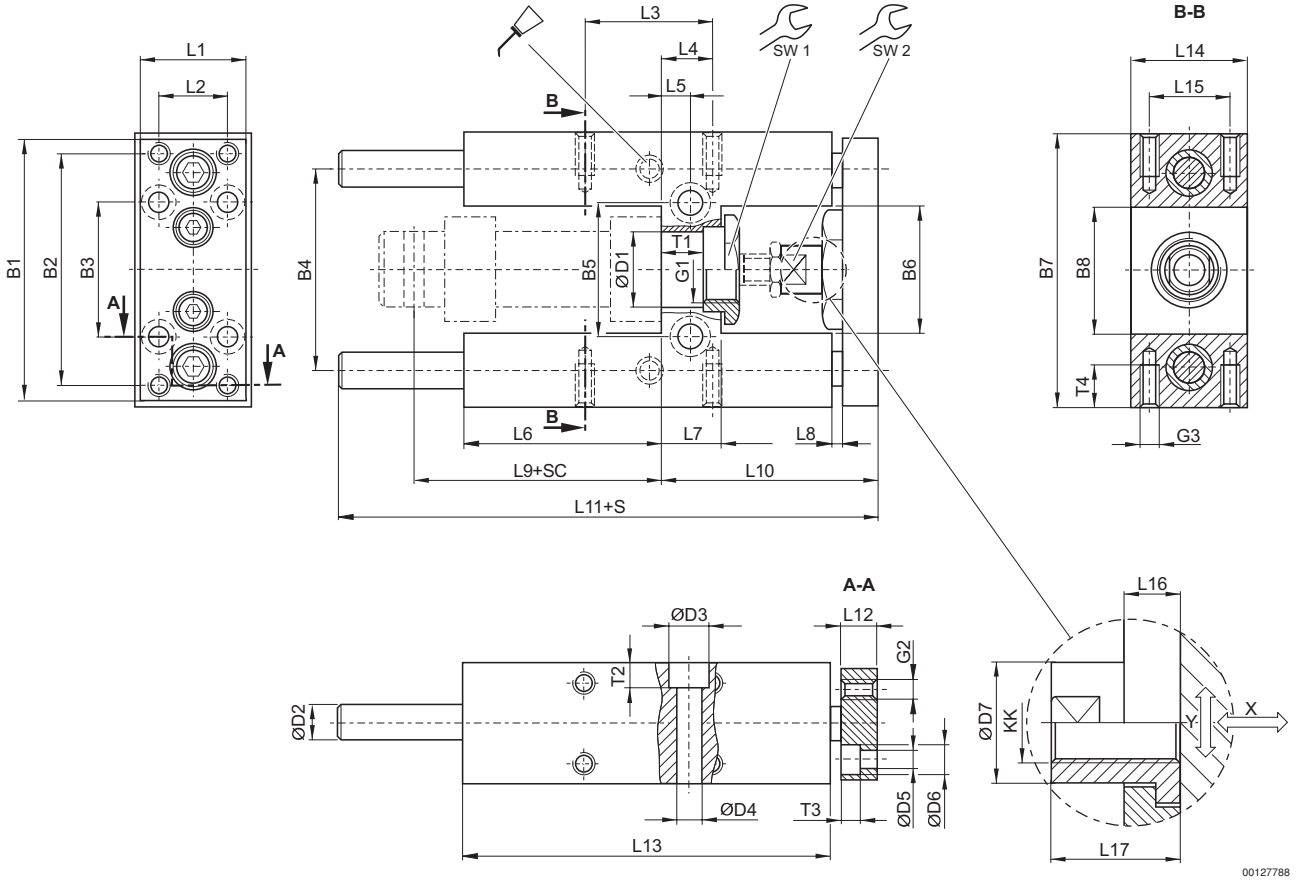

S = stroke
SC = cylinder stroke
X = max. play (axial)
Y = min. play (radial)

Piston Ø	B1	B2	B3	B4	B5	B6	B7	B8	D1	D2	D3	D4	D5
12	63	54	32	46	24	27	65	27	16 H7	8	–	5.5	4.5
20	76	68	40	58	38	37	79	37	22 H7	10	11	6.6	5.5
25	76	68	40	58	38	37	79	37	22 H7	10	11	6.6	5.5

Piston Ø	D6	D7	G1	G2	G3	KK	L1	L2	L3	L4	L5	L6
12	8	10	M16x1,5	M4	M4	M6	27	15	32.5	11	6.5	37
20	10.5	14.5	M22x1,5	M5	M6	M8	32	20	32.5	15	8.5	58
25	10.5	14.5	M22x1,5	M5	M6	M10x1,25	32	20	32.5	15	8.5	58

Piston Ø	L7	L8	L9	L10	L11	L12	L13	L14	L15	L16	L17	SW1	SW2
12	13	3	52.6	51	133	10	75	30	22	7	18	19	8
20	17	3	71	65	160.5	12	108	34	23	6	22	27	13
25	17	3	76	65	160.5	12	108	34	23	6	17	27	13

Piston Ø	T1	T2	T3	T4									
12	10.6	–	4.6	8									
20	11	7	5.7	14									
25	11	7	5.7	14									

Guide unit, GH1

► Ø 12 - 25 mm ► Plain bearing ► for standard cylinder ISO 6432

Useful load

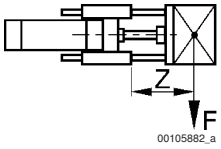

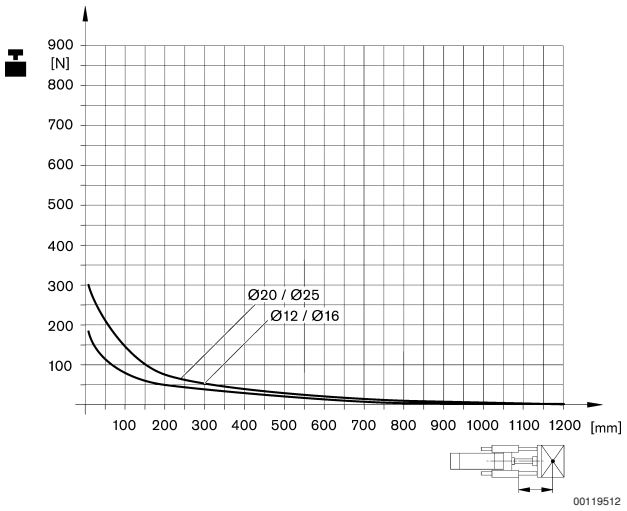

F = Useful load, Z = Projection

Bending due to own load

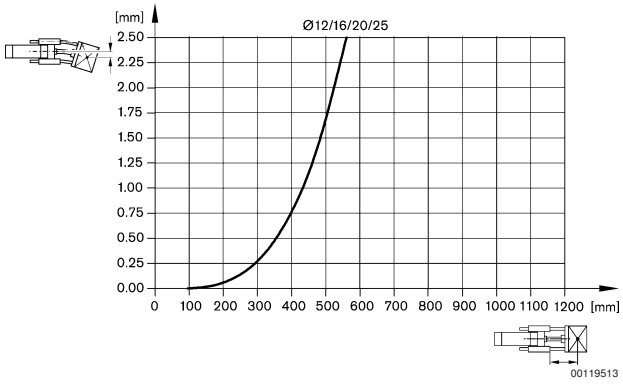

Bending due to 10 N load

