

RM PV

Photovoltaic modular fuse holder

for 10 x 85 and 10/14 x 85 gPV 1500 VDC fuses



***RM PV** 10/14 x 85 32 A*

The solution for

> Small installations up to large scale PV farms



Strong points

> Improved safety
> Product dedicated to PV applications
> Features and options

Conformity to standards

> IEC 60269-2

Function

RM PV are fuse holders designed for 10 x 85 and 10/14 x 85 cylindrical gPV fuses. They provide safety disconnection and protection against overcurrents caused by the reverse current in DC electrical PV circuits up to 32 A, 1500 VDC. Specific design guarantees a safety isolation of live parts even when the fuse carrier is extracted for fuse replacement.

Advantages

Improved safety

- Rated voltage of 1500 VDC.
- High temperature resistance self-extinguishing and halogen free thermoplastic materials.
- Live parts isolation.

Product dedicated to PV applications

- Protection against reverse currents by using gPV fuses dedicated to photovoltaic applications.
- Designed to be used with up to 32 A gPV fuses.

Features and options

- Optimised ventilation zones and spacings between the poles.
- Padlockable.
- Improved IP accessories.

Functions

Fuse-link size selector

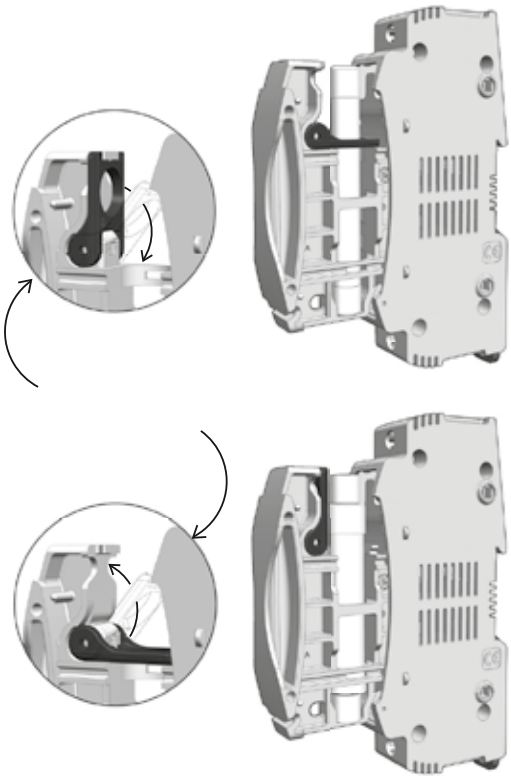

rm-pv_012_a_1_x_cat.ai

Lock of the fuse holder

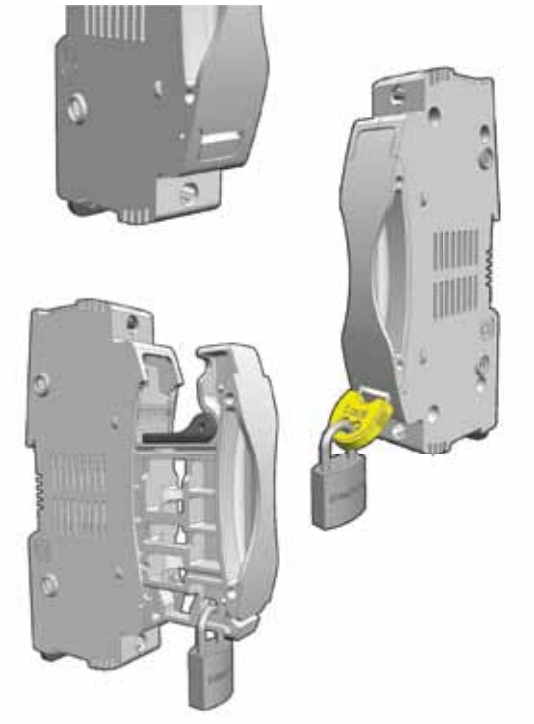

rm-pv_013_a_cat.psd

Special IP20 protection

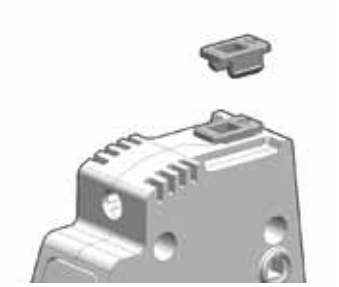

rm-pv_014_a_cat.psd

References

RM PV

No of poles	32 A 10 x 85	
	To be ordered in multiple of	Reference
1 P	6	57PV **1085**

Accessories

Handle interlocking system

Use

For padlock in closed position (padlock not supplied).

Rating (A)	Quantity (units)	Reference
32	5	5701 **9040**



rm-pv_015_a_cat.psd

Coupling system

Rating (A)	Quantity (units)	Reference
32	12	5704 **0003** (1)

(1) One coupling device allows to link two RM. Also sold in bags containing separate components (bag of 100 pieces) for assembling larger quantities. Contact us.



rm-pv_016_a_cat.psd

Improved insulation kit

Rating (A)	Reference
32	5701 **9010** (1)

1) 1 reference = 1 set of 10 couplings.



acces_361_a.eps

socomec
Innovative Power Solutions

Characteristics

Characteristics according to IEC 60269-2

Thermal current I_{th}	**32 A**
Fuse size	10 x 85 or 10/14 x 85
Rated insulation voltage U_i (V)	1500
Fuse Rating	
1500 VDC	32
1000 VAC	32
Power	
Rated dissipated power of the fuse (W/p)	6
Dissipated power of the fuse holder @100% I_n (W/p)	0.5
Dissipated power of the fuse holder @80% I_n (W/p)	0.3
Derating factor of design current for N poles side by side	
1 … 4	I_n
5 … 6	0.8 * I_n
7 … 9	0.7 * I_n
≥ 10	0.6 * I_n
Design current derating coefficient depending on the temperaure	
20°C	1
30°C	0.95
40°C	0.9
50°C	0.8
60°C	0.7
70°C	0.6
Connection	
Minimum Cu cable cross-section (mm²)	0.75
Maximum Cu cable cross-section (mm²)	16
Tightening torque (Nm)	2.5
Dimensional data	
Weight of 1 P (kg)	0.106

Dimensions

RM PV 32 A 1500 VDC

