E43912

Welding adapter for process sensors

ADAPT F.MOUNTING CLAMP

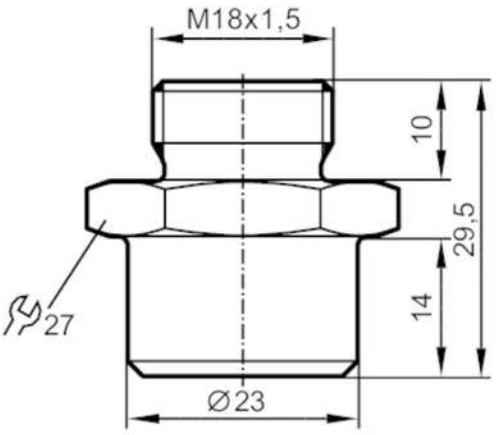

Application		
Pressure rating	[bar]	1
Note on pressure rating		in case of welded installation 50 bar
Mechanical data		
Weight	[g]	69.1
Materials		stainless steel (1.4404 / 316L)
Sensor connection		M18 x 1,5
Process connection		Ø 23 mm
Remarks		
Pack quantity		1 pcs.