Technical Information
Smartec CLD134

Hygienic measuring system for conductivity and concentration for applications in the food, beverage and pharmaceutical industries and in biotechnology



Application

The inductive conductivity measuring system is specifically designed for use in hygienic applications in the food, beverage and pharmaceutical industries and in biotechnology. Thanks to its hygiene certificates and its food-safe, virgin PEEK design without any joints or crevices, it meets the strict demands of these industries. Both compact and remote system versions are available. The Smartec CLD134 is ideal for:

- Phase separation of product/water and product/product mixtures in pipe systems
- Control of cleaning in place (CIP) processes in the return line
- Concentration control in the remaking of CIP cleaning agents
- Product monitoring in pipes, bottling plants and quality assurance
- Leakage monitoring

in the following industries:
- Dairies
- Breweries
- Beverages (water, juices, soft drinks)
- Pharmaceuticals and biotechnology

Your benefits

- Unique hygienic design, therefore no risk of recontamination
- Has all the hygiene certificates required in the hygiene sector
- Hygiene-compliant stainless steel transmitter housing
- Durable thanks to fully encapsulated, sealless design
- Fast measurement with temperature response time t_{90} under 26 s, ensuring safe and efficient phase separation
- Flexible thanks to a variety of operating options:
  - Keypad
  - HART® handheld terminal
  - PROFIBUS PA/DP
  - PC with FieldCare software package (with FDT/DTM technology)
- Basic version upgradeable by extending functions with remote parameter set configuration (measuring range switching)

Endress+Hauser
People for Process Automation

Function and system design

Measuring principle

Inductive conductivity measurement

An oscillator (1) generates an alternating magnetic field in the primary coil (2), which induces a current flow (3) in the medium. The strength of the current depends on the conductivity and thus on the ion concentration in the medium. The current flow in the medium, in turn, generates a magnetic field in the secondary coil (4). The resulting induced current is measured by the receiver (5) and used to determine the conductivity.

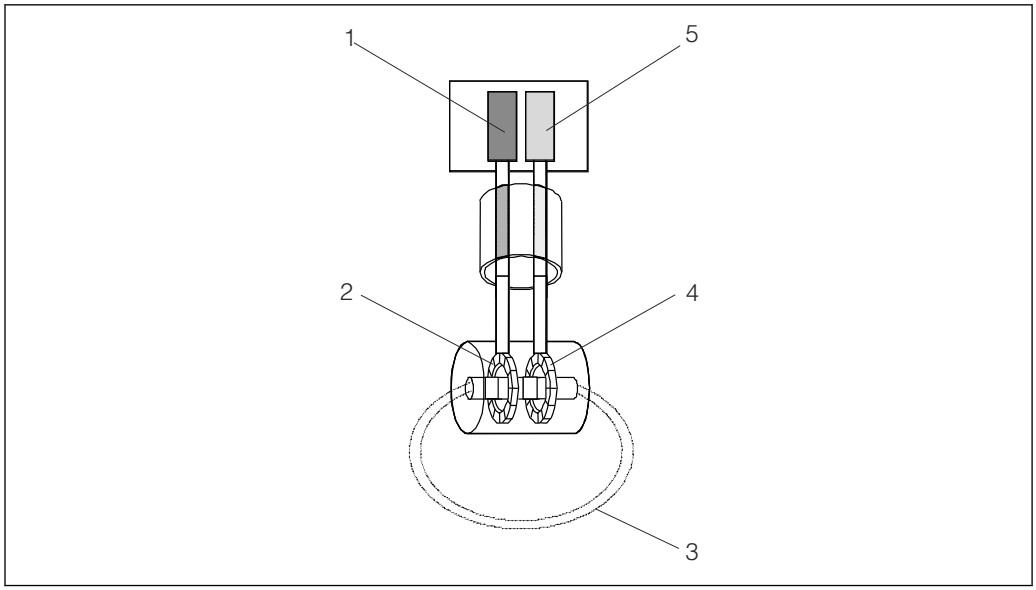

1 Inductive conductivity measurement

1 Oscillator
2 Primary coil
3 Current flow in the medium
4 Secondary coil
5 Receiver

Advantages of inductive conductivity measurement:
- No electrodes and therefore no polarization effects
- Accurate measurement in media with a high degree of pollution and a tendency to form buildup
- Complete galvanic isolation of the measurement and the medium

Important features of the Smartec CLD134

- **Hygiene**
  The injection-molded PEEK sensor offers outstanding chemical, mechanical and thermal resistance and is hygienically safe thanks to its seamless, crevice-free design. As only virgin PEEK is in contact with the medium, highest biological safety for the food, beverage and pharmaceutical sectors is guaranteed. The sensor has been designed according to the latest guidelines of the American Society of Mechanical Engineers - Bioprocessing Equipment (ASME BPE) and meets the requirements of EC Regulation No. 1935/2004 of the European Parliament on materials and articles intended to come into contact with food.
- **Certified hygiene**
  The sensor has all the necessary listings and approvals for the hygiene sector, such as exclusive use of FDA-listed materials for surfaces in contact with medium and certification according to 3-A standards. With regard to in-place cleanability, the CLS54 sensor is certified by the European Hygienic Engineering & Design Group (EHEDG). A certificate for biological reactivity testing according to USP part <87> and <88> class VI including lot number tracking back to compounding is also available as an option.
- **Process connections**
  The sensor is available with all the process connections commonly used in hygienic applications. The most common connections can be supplied as standard. Other process connections can be ordered as a custom-made product.

- **Process temperature, process pressure**
  The use of special materials means that the sensor is suitable for exposure to continuous temperatures of up to 125 °C (257 °F). It may be exposed to temperatures of up to 150 °C (300 °F) for a short time (max. 60 minutes) for sterilization phases. The sensor's pressure-resistance is 12 bar (174 psi), abs at temperatures up to 90 °C (194 °F) and at higher temperatures is always above the steam pressure. The sensor is suitable for underpressure applications.
- **Temperature measurement**
  The sensor has an integrated temperature sensor with a temperature response time t_{90} of less than 26 s, making efficient phase separations possible at varying and quickly changing process temperatures. The temperature sensor is embedded into the PEEK body without any seals, thereby ensuring a long sensor service life.
- **Temperature compensation**
  The following types of temperature compensation are available in the Smartec CLD134:
  – Linear compensation with user-configurable temperature coefficient α
  – Compensation according to IEC 60746-3 for NaCl
  – Compensation according to user-programmable coefficient table with a maximum of 10 elements.
- **Concentration Measurement**
  The transmitter can be switched from the conductivity operating mode to the concentration mode. In the concentration mode, four user-programmable and various pre-programmed concentration curves are available, especially for common CIP solutions. In this way, it is possible to display the concentration directly as a %.
- **Remote parameter set configuration**
  Smartec CLD134 can be ordered with remote parameter set configuration (measuring range switching, MRS) in order to:
  – Cover a large measuring range.
  – Adjust temperature compensation when the product is changed.
  – Switch between concentration curves.
- **Device versions**
  The Smartec CLD134 measuring system is available as both a compact version for simple installation and as a remote version (the sensor and transmitter are connected by a cable). Furthermore, the transmitter can be ordered separately without a sensor.

Measuring system

A complete measuring system comprises:
- The remote version of the Smartec CLD134 transmitter
- The CLS54 conductivity sensor with an integrated temperature sensor and fixed cable
  or
- The compact version with the integrated CLS54 conductivity sensor

Optionally for the remote version: CLK6 extension cable, VBM junction box, mounting kit for post mounting

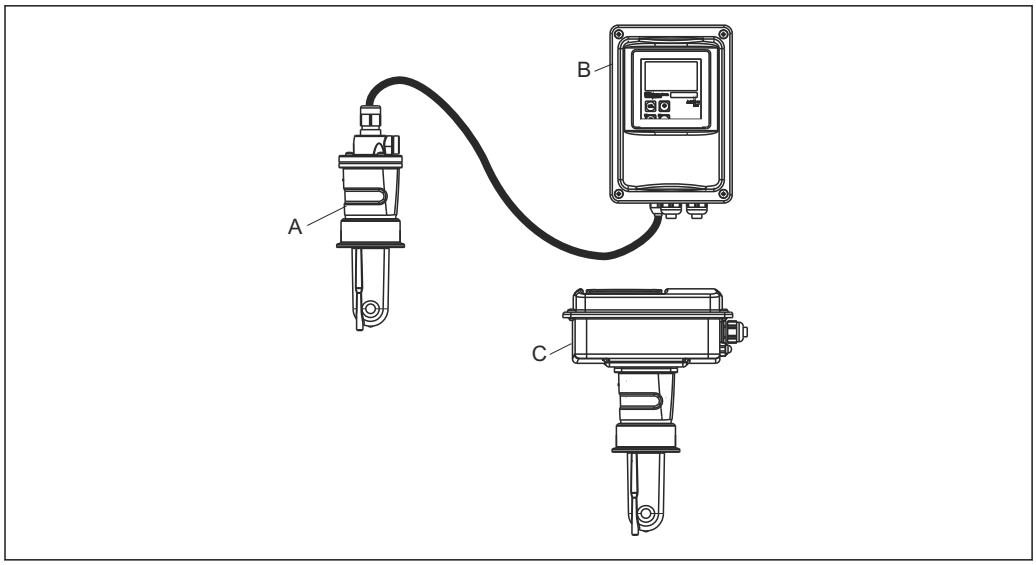

2 Example of a measuring system with CLD134

A CLS54 conductivity sensor
B Smartec CLD134 transmitter
C Smartec CLD134 compact version with integrated CLS54 conductivity sensor

Input

Measured values	Conductivity Concentration Temperature	
Measuring range	Conductivity:	Recommended range: 100 µS/cm to 2000 mS/cm (uncompensated)
	Concentration:	
	NaOH:	0 to 15 %
	HNO_3:	0 to 25 %
	H_2SO_4:	0 to 30 %
	H_3PO_4:	0 to 15 %
	User 1 (to 4):	(4 tables available in versions with additional "remote parameter set configuration" function)
	Temperature:	−35 to +250 °C (-31 to +482 °F)
Temperature measurement	Pt 1000	
Sensor cable	Max. cable length of 55 m (180 ft.) with CLK6 cable (remote version)	
Binary inputs 1 and 2	Voltage	10 to 50 V
	Current consumption	Max. 10 mA at 50 V

Output

Output signal	Conductivity, concentration: Temperature (optional second current output)	0 / 4 to 20 mA, galvanically isolated

Signal on alarm	2.4 or 22 mA in the event of an error	
Load	Max. 500 Ω	
Transmission range	Conductivity	Configurable
	Temperature	Configurable
Signal resolution	Max. 700 digits/mA	
Separation voltage	Max. 350 V_{RMS} / 500 V DC	
Minimum spread of output signal	Conductivity	
	Measured value 200 to 1999 µS/cm	200 µS/cm
	Measured value 0 to 19.99 mS/cm	2 mS/cm
	Measured value 20 to 200 mS/cm	20 mS/cm
	Measured value 200 to 2000 mS/cm	200 mS/cm
	Concentration	No minimum spread
	Temperature	15 °C or 27 °F
Overvoltage protection	According to EN 61000-4-5:1995	
Auxiliary voltage output	Output voltage	15 V ± 0.6 V
	Output current	Max. 10 mA
Contact outputs	Switching current with ohmic load (cos φ = 1)	Max. 2 A
	Switching current with inductive load (cos φ = 0.4)	Max. 2 A
	Switching voltage	Max. 250 V AC, 30 V DC
	Switching power with ohmic load (cos φ = 1)	Max. 500 VA AC, 60 W DC
	Switching power with inductive load (cos φ = 0.4)	Max. 500 VA AC
Limit contactors	Pickup/dropout delay (for versions with remote parameter set configuration)	0 to 2000 s
Alarm	Function (switchable):	Latching/momentary contact
	Alarm delay:	0 to 2000 s (min)

Power supply

Electrical connection

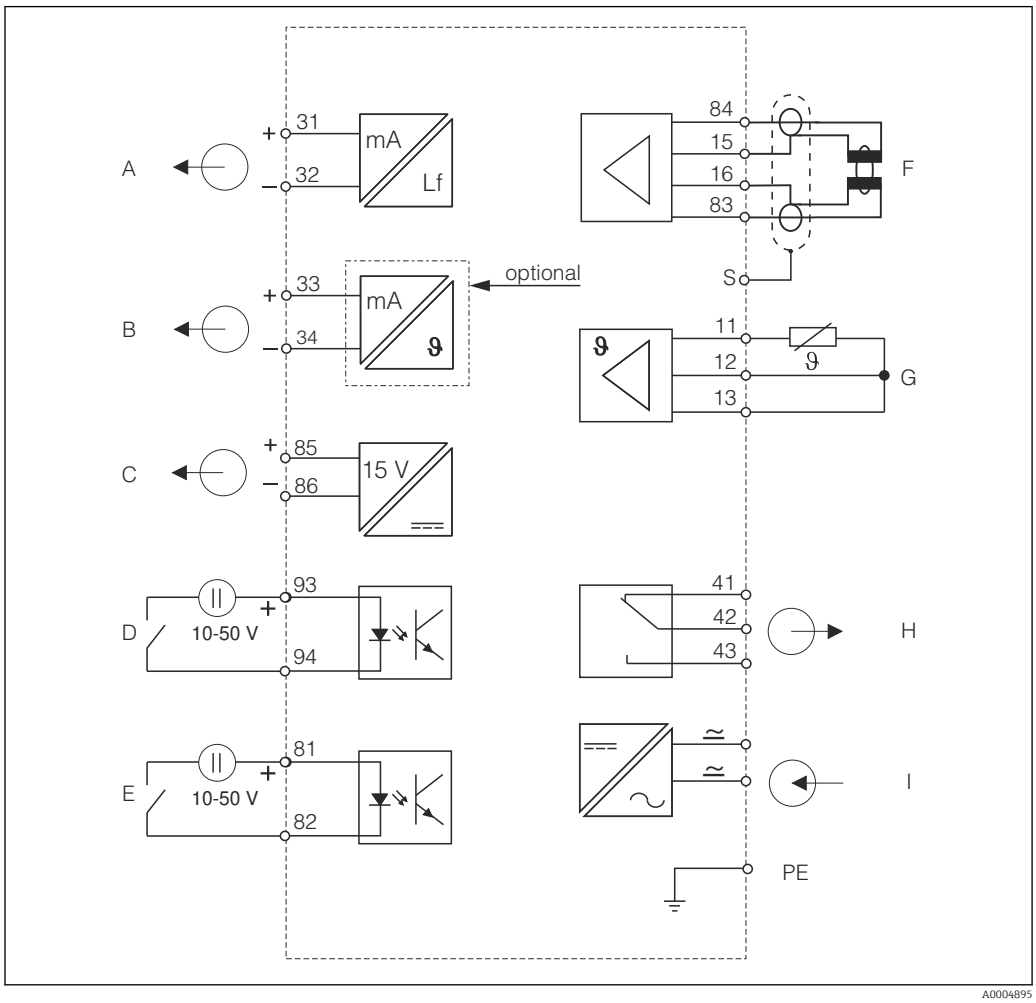

3 *Electrical connection CLD134*

A Signal output 1, conductivity
B Signal output 2, temperature
C Auxiliary voltage output
D Binary input 2 (MRS 1+2)
E Binary input 1 (hold / MRS 3+4)
F Conductivity sensor
G Temperature sensor
H Alarm (current-free contact position)
I Power supply

MRS: remote parameter set configuration (measuring range switching)

Sensor connection

The remote sensor version is connected using a shielded, multi-core fixed cable. You must use the VBM junction box and the CLK6 extension cable to extend the cable (see "Accessories").

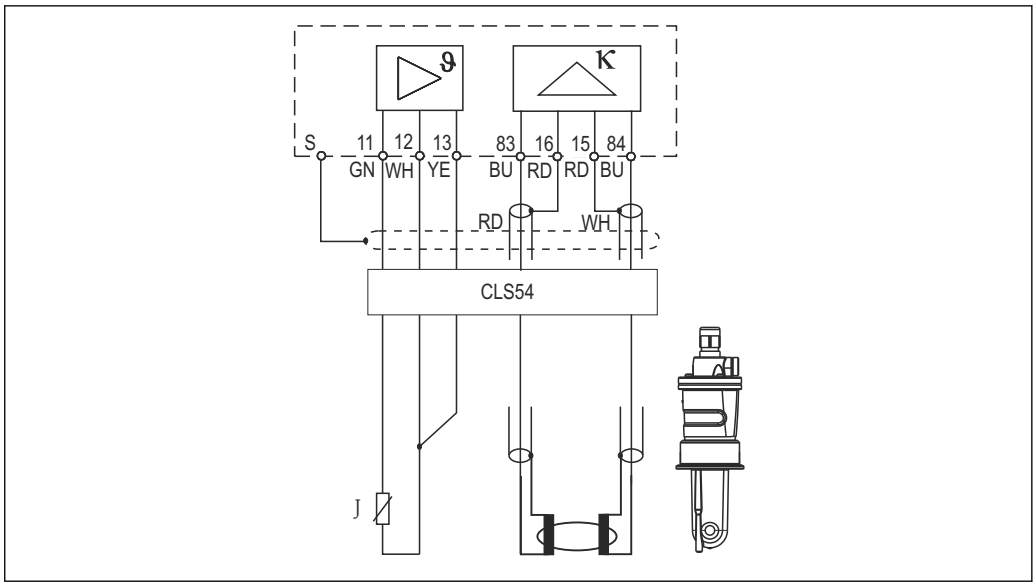

4 *CLD134 wiring diagram*

Cable entries

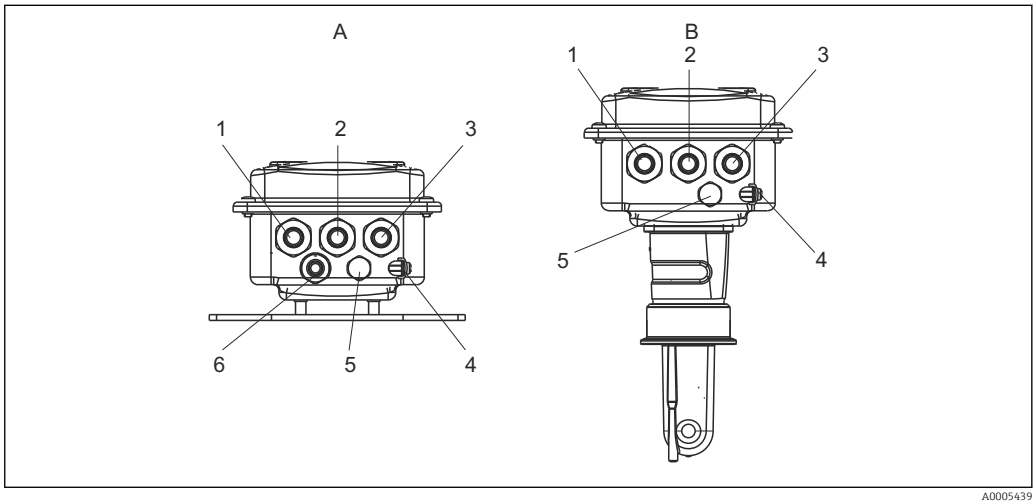

5 *Arrangement of cable entries*

A Separate version
1 Dummy plug, analog output, binary input
2 Cable entry for fault-signaling contact
3 Cable entry for power supply
4 Functional earth (FE)
5 Pressure compensation element PCE (Goretex® filter)
6 Cable entry for sensor connection, Pg 9

B Compact version
1 Dummy plug, analog output, binary input
2 Cable entry for fault-signaling contact
3 Cable entry for power supply
4 Functional earth (FE)
5 Pressure compensation element PCE (Goretex® filter)

Supply voltage

Depending on order version:
- 100/115/230 V AC +10/-15 %, 48 to 62 Hz
- 24 V AC/DC +20/-15 %

Circuit breaker

NOTICE

The device does not have a power switch

- ▶ The customer must provide a protected circuit breaker in the vicinity of the device.
- ▶ The circuit breaker must be a switch or power switch, and you must label it as the circuit breaker for the device.
- ▶ At the supply point, the power supply must be isolated from dangerous live cables by double or reinforced insulation in the case of devices with a 24 V supply voltage.

Power consumption	Max. 7.5 VA	
Mains fuse	Fine-wire fuse, semi-delay 250 V/3.15 A	
Cable cross-section	Cable length ≤ 10 m (33 ft)	At least 3 x 0.75 mm² (≙ 18 AWG)
	Cable length > 10 ≤ 20 m (> 33 ≤ 66 ft)	At least 3 x 1.5 mm² (≙ 24 AWG)

Performance characteristics

Measured value resolution	Temperature:	0.1 °C
Response time	Conductivity:	t95 < 1.5 s
	Temperature:	t90 < 26 s
Measured error of sensor [1]	Conductivity:	± (0.5 % of reading + 10 µS/cm) after calibration (plus uncertainty of the conductivity of the calibration solution)
	Temperature:	Pt 1000 Class A according to IEC 60751
Measured error of transmitter [2]	Conductivity:	
	- Display:	Max. 0.5 % of measured value ± 4 digits
	- Conductivity signal output:	Max. 0.75 % of current output range
	Temperature:	
	- Display:	Max. 0.6 % of measuring range
	- Temperature signal output:	Max. 0.75 % of current output range
Repeatability [3]	Conductivity:	Max. 0.2 % of measured value ± 2 digits
Cell constant	6.3 cm^{-1}	
Measuring frequency (oscillator)	2 kHz	
Temperature compensation	Range	−10 to +150 °C (+14 to +302 °F)
	Types of compensation	▪ None ▪ Linear with user-configurable temperature coefficient ▪ A user-programmable coefficient table (four tables in versions with remote parameter set configuration) ▪ NaCl in accordance with IEC 60746-3
	Minimum distance for table:	1 K
Reference temperature	25 °C (77 °F)	
Temperature offset	Adjustable, ± 5 °C, for adjusting the temperature display	

1) In accordance with DIN IEC 746 Part 1, at rated operating conditions
2) In accordance with DIN IEC 746 Part 1, at rated operating conditions
3) In accordance with DIN IEC 746 Part 1, at rated operating conditions

Installation

Installation instructions

For a 3-A compliant installation, the following must be noted:

After the instrument is installed its hygienic integrity shall be maintained. All process connections must be 3-A compliant.

The sensor must be completely immersed in the medium. Avoid air bubbles in the area of the sensor.

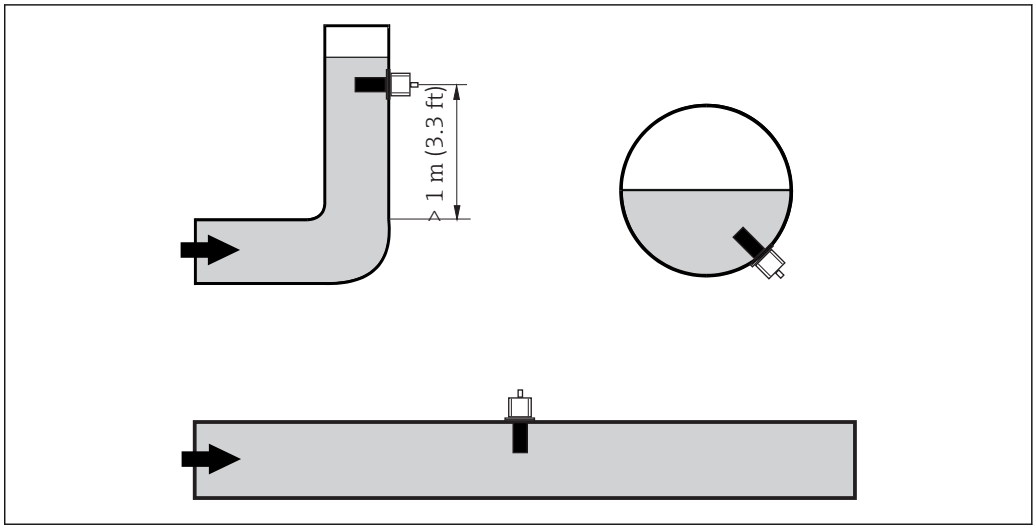

6 *Orientation of conductivity sensors*

If the flow direction changes (after pipe bends), turbulence in the medium can result. Install the sensor at a distance of at least 1 m (3.3 ft) downstream from a pipe bend.

The ionic current in the liquid is affected by the walls in confined installation conditions. This effect is compensated by what is referred to as the installation factor. The installation factor can be entered in the transmitter for the measurement or the cell constant is corrected by multiplying by the installation factor.
The value of the installation factor depends on the diameter and the conductivity of the pipe nozzle as well as the distance a between the sensor and the wall.
The installation factor can be disregarded (f = 1.00) if the distance to the wall is sufficient (a > 15 mm, from DN 65).
If the distance to the wall is smaller, the installation factor increases for electrically insulating pipes (f > 1) and decreases for electrically conductive pipes (f < 1).
It can be measured using calibration solutions, or a close approximation can be determined from the diagram below.

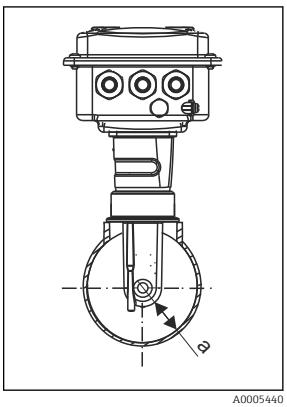

7 *Installation of CLD134*

a *Wall distance*

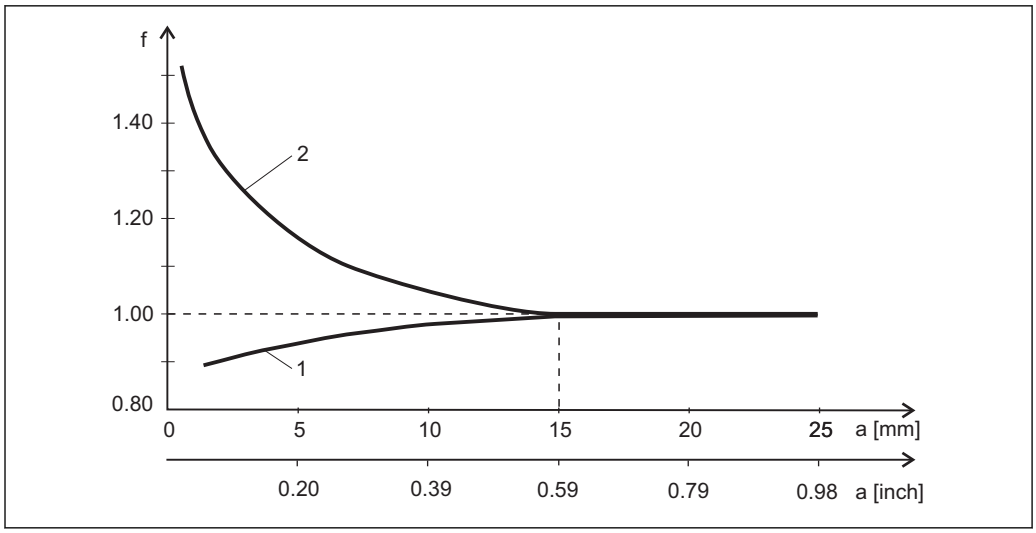

8 *Relationship between installation factor f and wall distance a*

1 Electrically conductive pipe wall
2 Electrically insulating pipe wall

Air set

To compensate for residual coupling between the two coils and in the cable, zero adjustment in air ("air set") must be performed before the sensor is installed.

Installation of CLD134, remote version

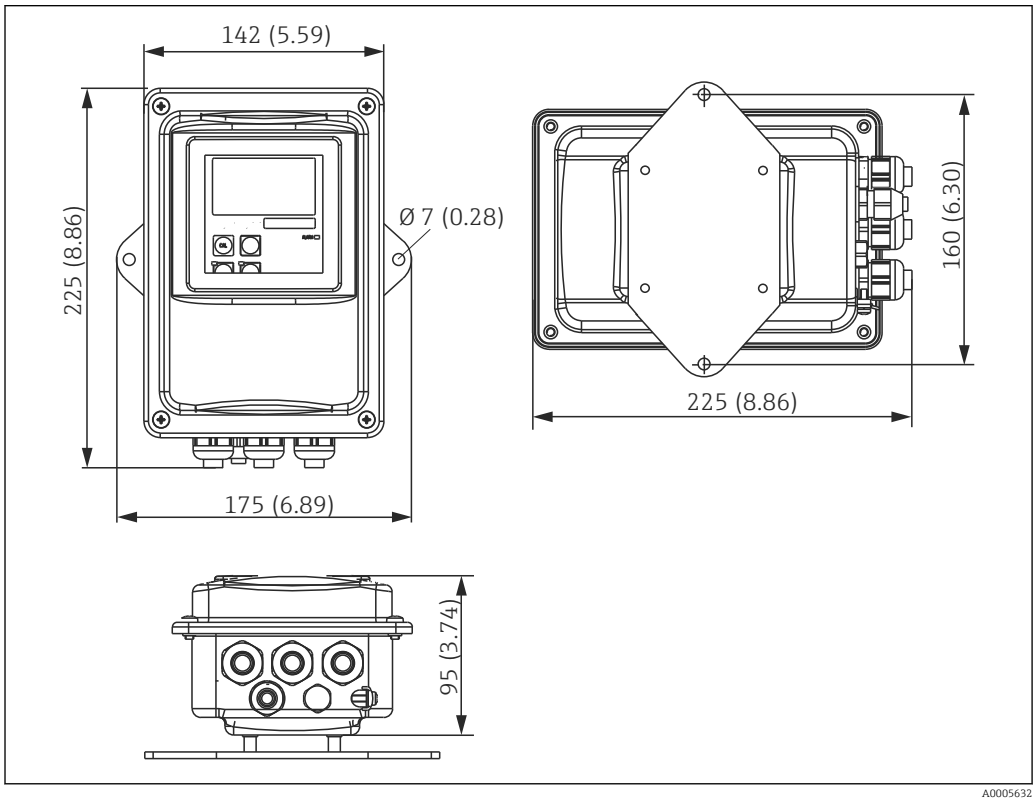

9 *CLD134 wall mounting, remote version*

Wall mounting is not recommended in areas with strict hygiene requirements!

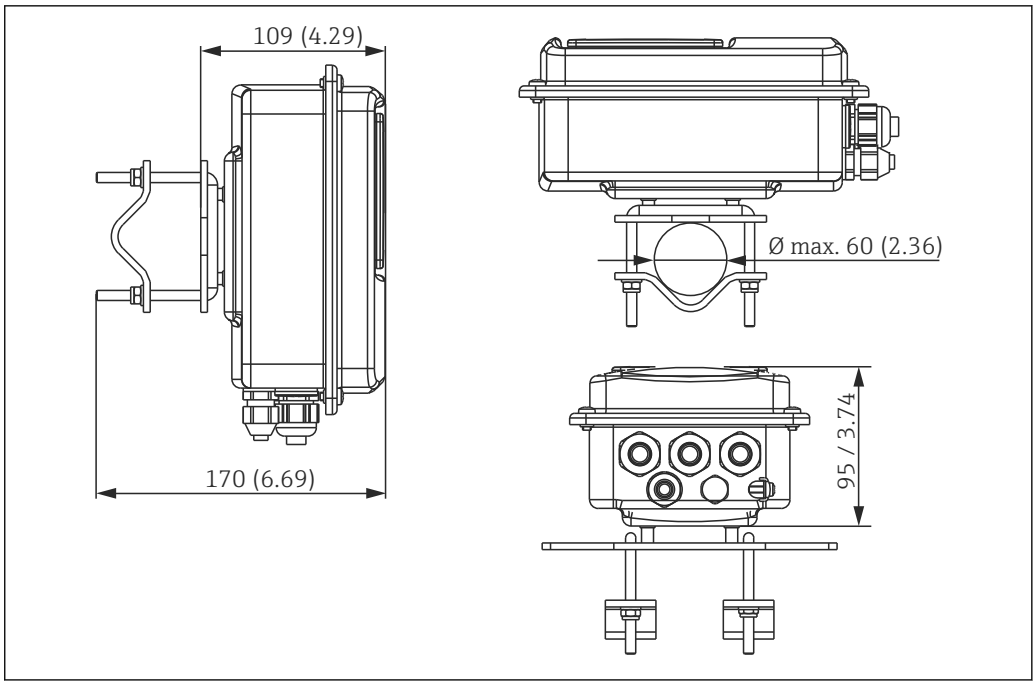

10 CLD134 remote version for post mounting on pipes Ø 60 mm (2.36") with a post mounting kit (see "Accessories")

Shorten the thread as much as possible if you are using the transmitter in areas with strict hygiene requirements!

Installation of CLD134, compact version

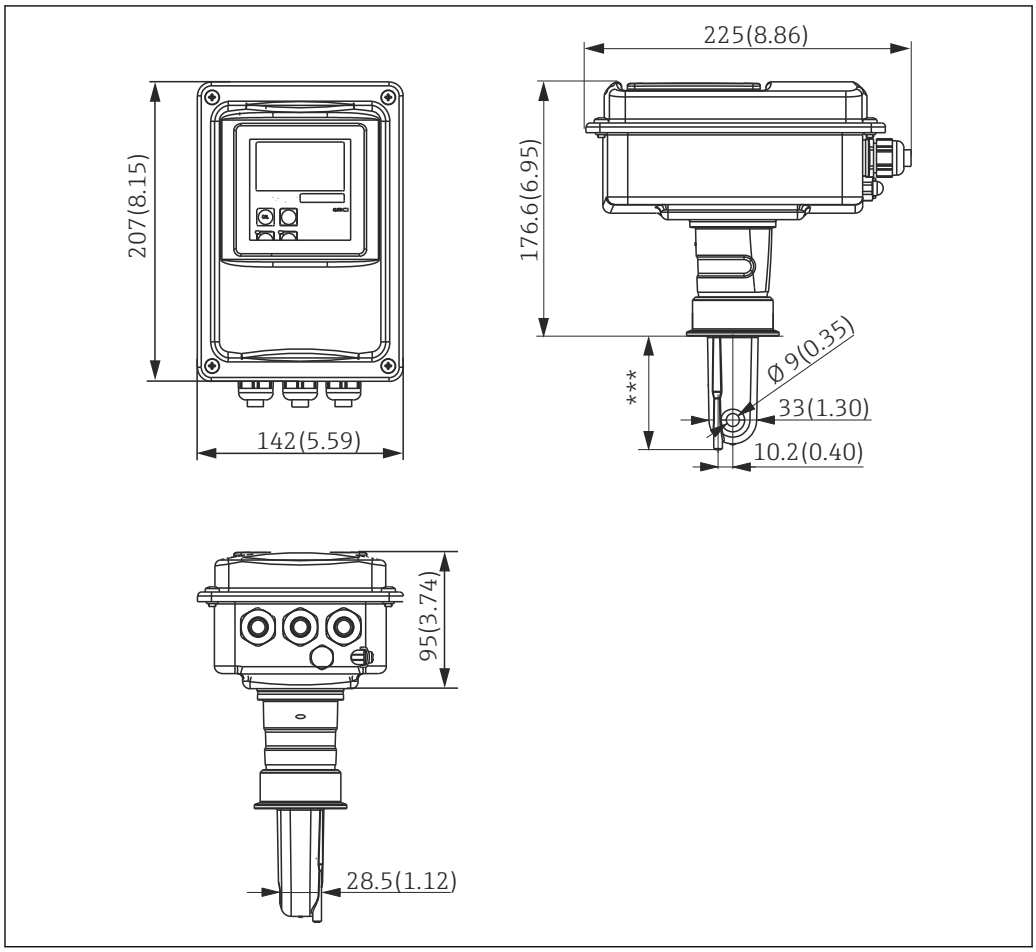

11 *Installation dimensions of CLD134, compact version*

*** *Depends on the process connection selected*

The symmetrical measuring channel allows flow in both directions.

The housing can be rotated against the sensor so that the display can be read easily in both a vertical and a horizontal mounting position.

Environment

Ambient temperature	Compact version or electronics housing: Sensor (remote version):	0 to +55 °C (32 to +131 °F) -20 to +60 °C (-4 to +140 °F)
Ambient temperature limits	−10 to +70 °C (14 to +158 °F) (remote version) and separate transmitter −10 to +55 °C (14 to +131 °F) (compact version) See also graphic for "Permitted temperature ranges of Smartec CLD134".	
Storage temperature	-25 to +70 °C (-13 to +158 °F)	
Electromagnetic compatibility	Interference emission and interference immunity as per EN 61326-1:2006, EN 61326-2-3:2006	
Degree of protection	IP67/Type 4	
Relative humidity	10 to 95 %, non-condensating	
Vibration resistance as per IEC 60770-1 and IEC 61298-3	Oscillation frequency: Deflection (peak value): Acceleration (peak value):	10 to 500 Hz 0.15 mm 19.6 m/s^2 (64.3 ft/s^2)
Display window shock resistance	9 J	

Process

Process temperature	CLS54 sensor with:	
	Remote version:	max. 125 °C (257 °F) at 70 °C (158 °F) ambient temperature
	Compact version:	max. 125 °C (257 °F) at 35 °C (95 °F) ambient temperature max. 55 °C (131 °F) at 55 °C ambient temperature
Sterilization	CLS54 sensor with:	
	Remote version:	150 °C (302 °F) at 60 °C (140 °F) ambient temperature, 6 bar (87 psi), abs, max. 60 min
	Compact version:	150 °C (302 °F) at 35 °C (95 °F) ambient temperature, 6 bar (87 psi), abs, max. 60 min
Absolute process pressure	13 bar (188.5 psi), abs to up to 90 °C (194 °F) 9 bar (130.5 psi), abs at 125 °C (257 °F) 1 to 6 bar (14.5 to 87 psi), abs in CRN environment (tested with 51 bar (739.5 psi), abs) Negative pressure to 0.1 bar (1.45 psi) absolute	

Permitted temperature ranges of the Smartec CLD134

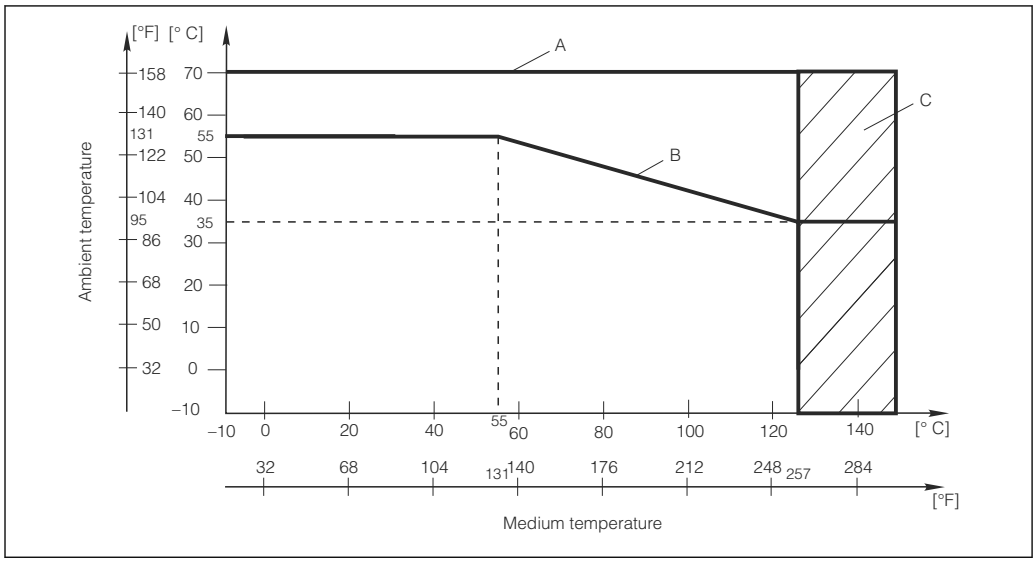

12 Permitted temperature ranges of Smartec CLD134

A CLS54 sensor with remote version
B Compact version
C Temporarily for sterilization (< 60 min)

Pressure-temperature ratings of CLS54 sensor

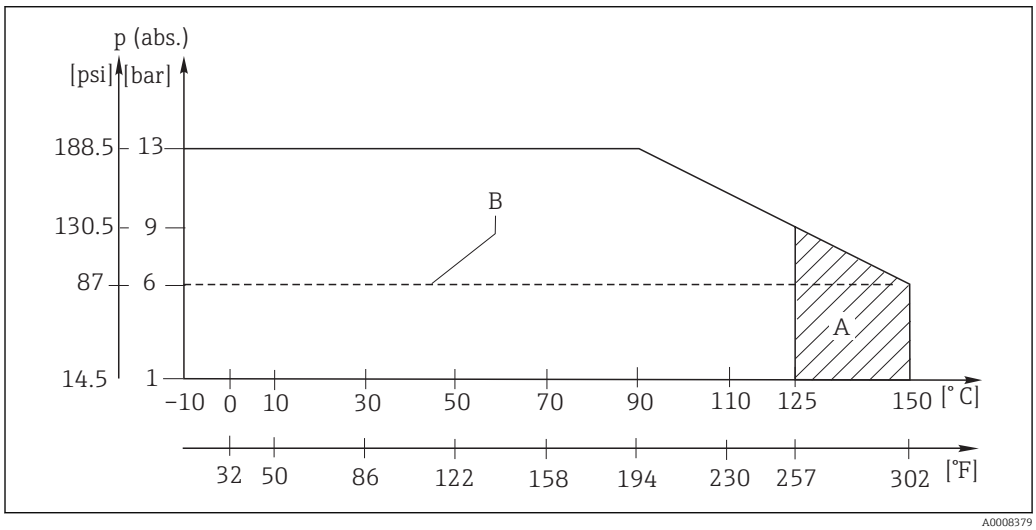

13 Pressure temperature ratings

A Temporarily for sterilization (max. < 60 minutes)
B MAWP (maximum allowable working pressure) according to ASME-BPVC Sec. VIII, Div 1, UG101 for CRN registration

Flow velocity

Max. 5 m/s (16.4 ft/s) for low-viscosity media in DN65 pipes

Mechanical construction

Dimensions

Remote version with mounting plate:	L x B x D: 225 x 142 x 109 mm (8.86 x 5.59 x 4.29 ")
Compact version:	
Version MV5, CS1, AA5, SMS:	L x B x D: 225 x 142 x 255 mm (8.86 x 5.59 x 10.04 ")
Version VA4, BC5:	L x B x D: 225 x 142 x 213 mm (8.86 x 5.59 x 8.39 ")

Weight

Remote version:	
Transmitter:	Approx. 2.5 kg (5.5 lb.)
CLS54 sensor:	Depending on version 0.3 to 0.5 kg (0.66 to 1.1 lb.)
Compact version with CLS54 sensor:	Approx. 3 kg (6.6 lb.)

Materials of CLS54 sensor (in contact with medium)

In contact with medium:	Virgin PEEK
Not in contact with medium:	PPS-GF40 Stainless steel 1.4404 (AISI 316L) Screws: 1.4301 (AISI 304) FKM, EPDM (seals) PVDF (cable glands - remote version only) TPE (cable - remote version only)

Materials of transmitter

Housing:	Stainless steel 1.4301 (AISI 304)
Front window:	Polycarbonate

Chemical resistance of CLS54 sensor

Medium	Concentration	PEEK
Caustic soda NaOH	0 to 15 %	20 to 90 °C (68 to 194 °F)
Nitric acid HNO_3	0 to 10 %	20 to 90 °C (68 to 194 °F)
Phosphoric acid H_3PO_4	0 to 15 %	20 to 80 °C (68 to 176 °F)
Sulfuric acid H_2SO_4	0 to 30 %	20 °C (68 °F)
Peracetic acid H_3C-CO-OOH	0.2 %	20 °C (68 °F)

Errors and omissions excepted

Process connections of CLD134

- Sanitary connection DIN 11851, DN 50 [a)]
- Aseptic coupling DIN 11864-1 form A, for pipe according to DIN 11850, DN 50 (the sensor has the shape of the aseptic liner)
- Clamp ISO 2852 (also for TriClamp®, DIN 32676), 2" (long design)
- SMS coupling 2" [b)]
- Varivent N DN 40 - 125
- NEUMO BioControl D50, DN 40.2"

Additional process connections are available on request.

a) Sanitary connection DIN 11851 is generally not considered to be hygienic. With the SKS Siersma adapter, this process connection meets the requirements of the 3-A standard.

b) The process connection does not meet the EHEDG hygienic requirements.

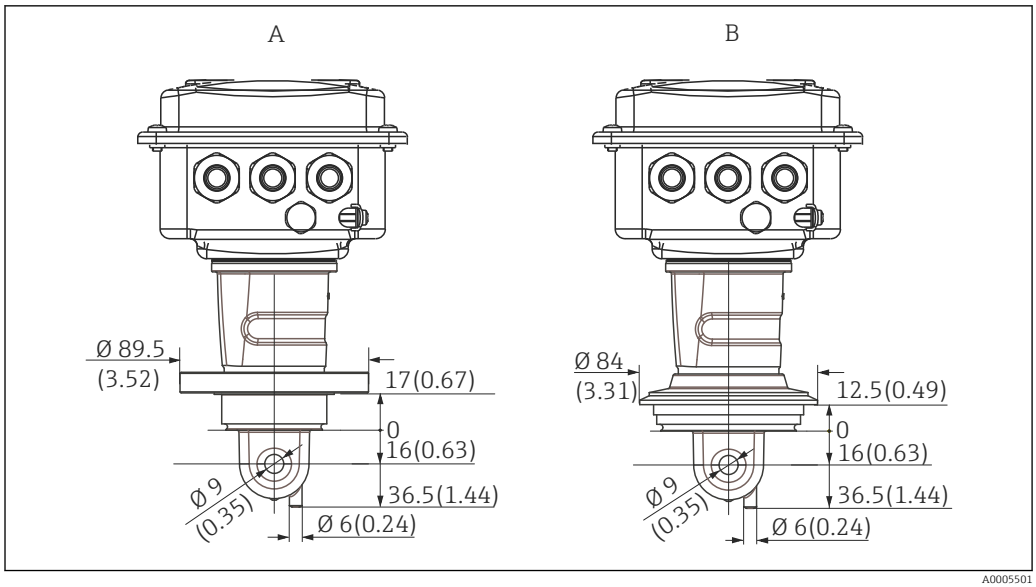

14 *Process connections for compact version (short), dimensions in mm (inch)*

A *NEUMO BioControl D50*
For pipe connection: *DN 40 (DIN 11866 series A, DIN 11850)*
DN 42.4 (DIN 11866 series B, DIN EN ISO 1127)
2" (DIN 11866 series C, ASME-BPE)

B *Varivent N DN 40 to 125*

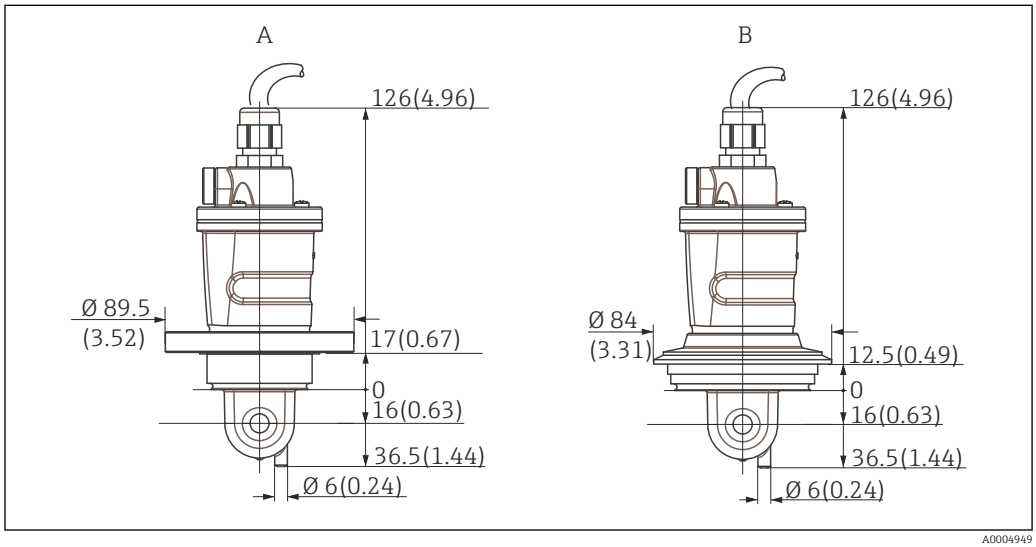

15 *Process connections of CLS54 (short version)*

A *NEUMO BioControl D50*
For pipe connection: *DN 40 (DIN 11866 series A, DIN 11850)*
DN 42.4 (DIN 11866 series B, DIN EN ISO 1127)
2" (DIN 11866 series C, ASME-BPE)

B *Varivent N DN 40 to 125*

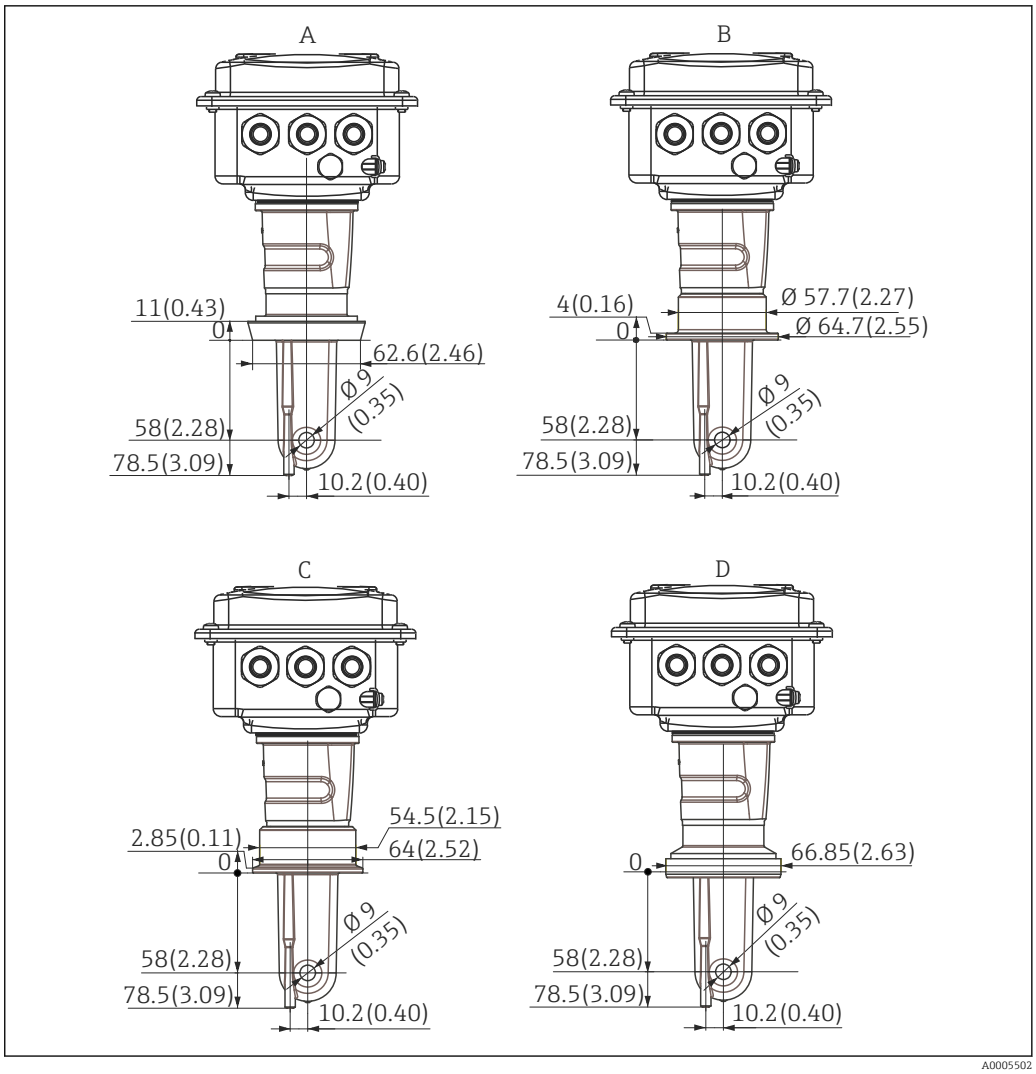

16 Process connections for compact version (long), dimensions in mm (inch)

A Sanitary connection DIN 11851 DN 50
B SMS coupling 2"
C Clamp ISO 2852, 2"
D Aseptic coupling DIN 11864-1 form A, for pipe according to DIN 11850, DN 50

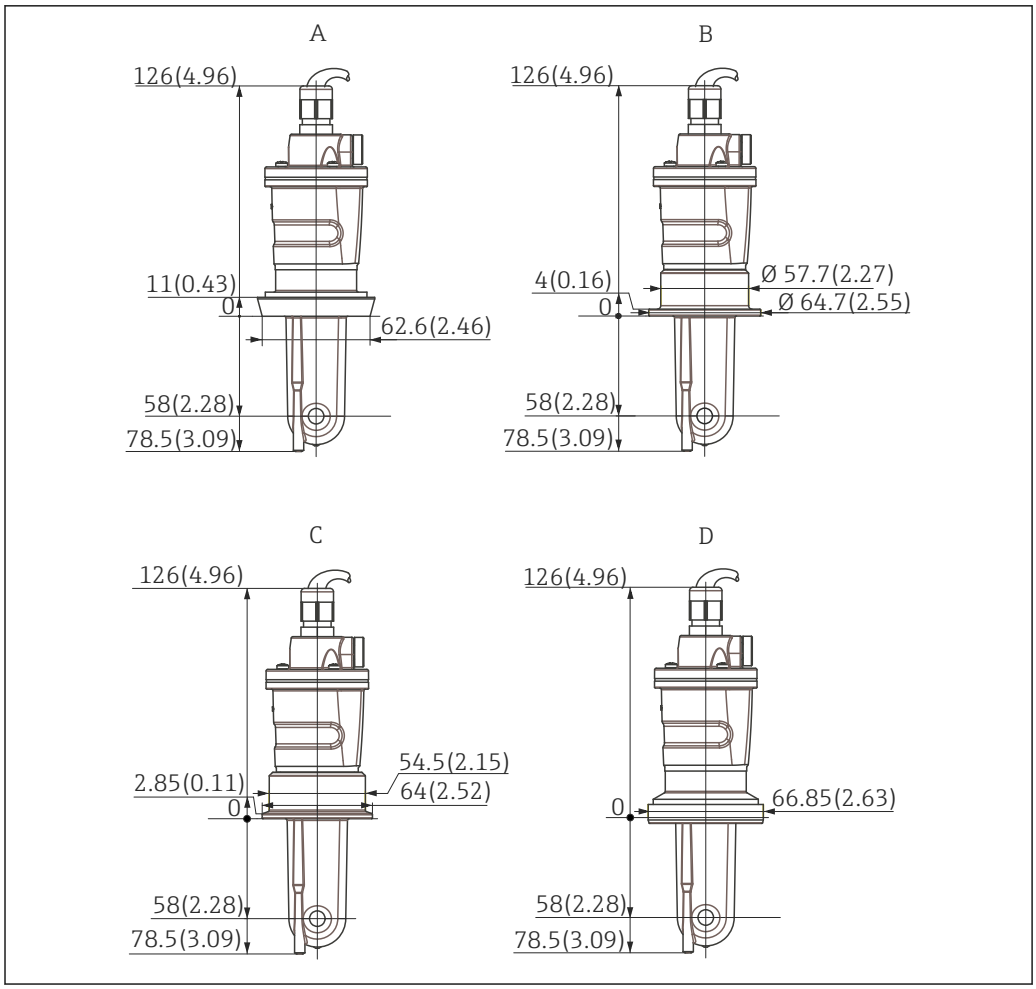

17 *Process connections for CLS54 (long version), dimensions in mm (inch)*

A Sanitary connection DIN 11851, DN 50
B SMS coupling 2"
C Clamp ISO 2852 , 2"
D Aseptic coupling DIN 11864-1 form A, for pipe according to DIN 11850, DN 50

Operability

Display and operating elements

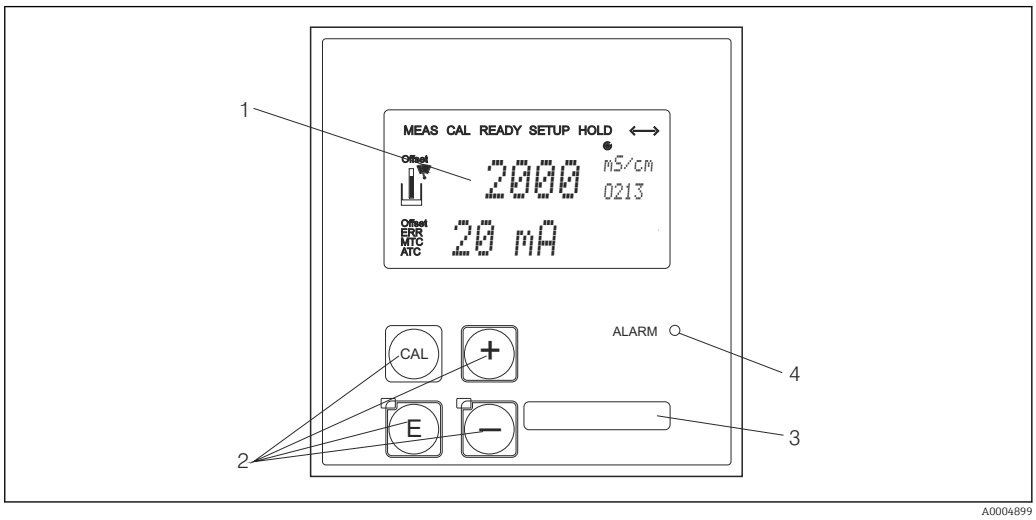

18 *Display and keys of the CLD134*

1 *LC display for displaying the measured values and configuration data*
2 *Four operating keys for calibration and device configuration*
3 *Field for user-defined information*
4 *Light emitting diode for alarm function*

Operation

You can choose from the following options to operate the Smartec CLD134:
- Via the Smartec keypad
  The four operating keys are covered by the housing cover. To operate the Smartec, loosen the four screws and open the housing cover.
- Via the HART interface
  - HART handheld terminal
  - PC with HART modem and FieldCare software package (with FDT/DTM technology)
- Via PROFIBUS PA/DP by PC with a corresponding interface and the Fieldcare software package (with FDT/DTM technology) or via a programmable logic controller (PLC).

Operating functions

All the device's operating functions are arranged in a clear menu structure. The individual parameters can only be modified once the access code has been entered. The current position in the menu structure is indicated.

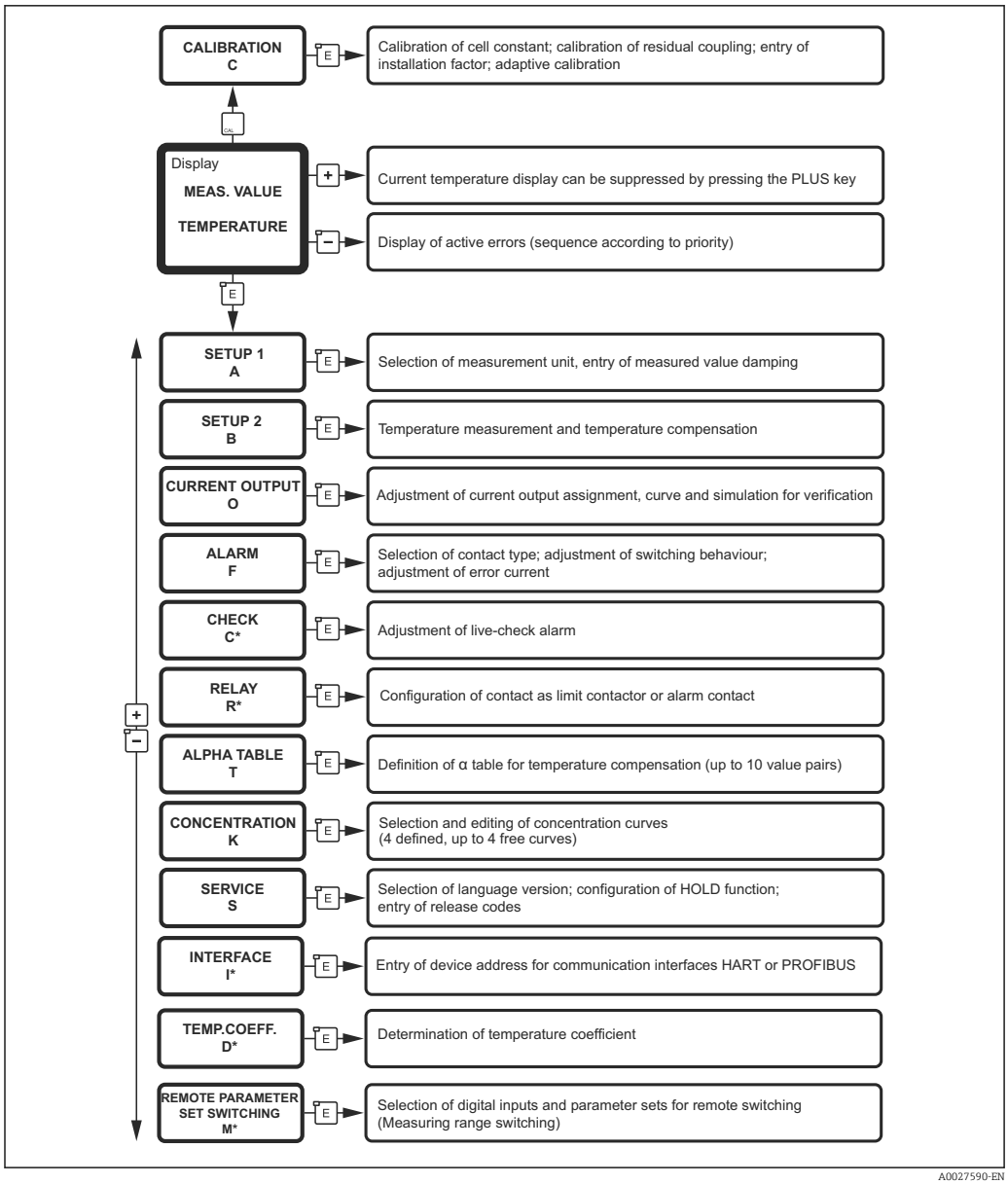

19 *Overview of the Smartec CLD134 menu, with all possible options that can be installed*

* *Menus not available in basic device version*

Certificates and approvals

Hygiene

FDA

All materials in contact with the product are listed by the FDA.

EHEDG

The cleanability of the CLS54 sensor is certified to EHEDG Type EL - Class I.

When using the sensor in hygienic applications, please note that the cleanability of the sensor also depends on the way the sensor is installed. To install the sensor in a pipe, use the appropriate and EHEDG-certified flow vessels for the particular process connection.

3-A

Certified according to 3-A Standard 74- ("3-A Sanitary Standards for Sensor and Sensor Fittings and Connections Used on Milk and Milk Products Equipment").

Biological reactivity (USP class VI) (option)

Biological reactivity test certificate according to USP (United States Pharmacopoeia) part <87> and part <88> class VI with lot number traceability of materials in contact with the medium.

EC Regulation No. 1935/2004

The sensor meets the requirements of EC Regulation No. 1935/2004 on materials and articles intended to come into contact with food.

Pressure approval

Canadian pressure approval for pipes according to ASME B31.3

Ordering information

Product page

www.endress.com/CLD134

Product Configurator

The navigation area is located on the right of the product page.

1. Under "Device support" click "Configure your selected product".
   ↳ The Configurator opens in a separate window.
2. Select all the options to configure the device in line with your requirements.
   ↳ In this way, you receive a valid and complete order code for the device.
3. Export the order code as a PDF or Excel file. To do so, click the appropriate button at the top of the screen.

Scope of delivery

The scope of delivery of the "compact version" comprises:
- 1 compact Smartec CLD134 measuring system with an integrated sensor
- 1 terminal strip set
- 1 set of Operating Instructions BA00401C/07/EN
- 1 set of Brief Operating Instructions KA00401C/07/EN
- For versions with HART communication:
  1 set of Operating Instructions: Field communication with HART BA00212C/07/EN
- For versions with PROFIBUS interface:
  - 1 set of Operating Instructions: Field communication with PROFIBUS BA00213C/07/EN
  - 1 M12 connector (for device version -******PF*)

The scope of delivery of the "remote version" comprises:
- 1 Smartec CLD134 transmitter
- 1 CLS54 inductive sensor with fixed cable
- 1 terminal strip set
- 1 set of Operating Instructions BA00401C/07/EN
- 1 set of Brief Operating Instructions KA00401C/07/EN
- For versions with HART communication:
  1 set of Operating Instructions: Field communication with HART BA00212C/07/EN
- For versions with PROFIBUS interface:
  - 1 set of Operating Instructions: Field communication with PROFIBUS BA00213C/07/EN
  - 1 M12 connector (for device version -******PF*)

The scope of delivery of the "transmitter excluding sensor" version comprises:
- 1 Smartec CLD134 transmitter
- 1 terminal strip set
- 1 set of Operating Instructions BA00401C/07/EN
- 1 set of Brief Operating Instructions KA00401C/07/EN
- For versions with HART communication:
  1 set of Operating Instructions: Field communication with HART BA00212C/07/EN
- For versions with PROFIBUS interface:
  - 1 set of Operating Instructions: Field communication with PROFIBUS BA00213C/07/EN
  - 1 M12 connector (for device version -******PF*)

Basic version and function upgrade

Functions of the basic version	Additional options and associated functions
▪ Measurement ▪ Calibration of cell constant ▪ Calibration of residual coupling ▪ Entry of installation factor ▪ Device parameter read-out ▪ Linear current output for measured value ▪ Current output simulation for measured value ▪ Service functions ▪ Choice of temperature compensation (including a user-configurable coefficient table) ▪ Choice of concentration measurement (4 fixed curves, 1 user-configurable table) ▪ Relay as a fault-signaling contact	▪ Second current output for temperature (additional hardware option) ▪ HART communication ▪ PROFIBUS communication **Remote parameter set configuration (additional software option):** ▪ Remote switching of max. 4 parameter sets (measuring ranges) ▪ Temperature coefficients can be determined ▪ Temperature compensation can be selected (including 4 user-configurable coefficient tables) ▪ Choice of concentration measurement (4 fixed curves, 4 user-configurable tables) ▪ Measuring system checked with PCS alarm (live check) ▪ Relay can be configured as limit contactor or fault-signaling contact **Biological reactivity test in accordance with USP <87>, <88> class VI**

Accessories

Cable extension

Measuring cable CLK6
- Extension cable for inductive conductivity sensors, for extension via VBM junction box
- Sold by the meter, order number: 71183688

VBM
- Junction box for cable extension
- 10 terminal strips
- Cable entries: 2 x Pg 13.5 or 2 x NPT ½"
- Material: aluminum
- Degree of protection: IP 65
- Order numbers
  - Cable entries Pg 13.5 : 50003987
  - Cable entries NPT ½": 51500177

Depending on the ambient conditions, the inserted desiccant pouch must be checked and replaced at regular intervals to prevent incorrect measurements resulting from moisture bridges in the measuring line.

Desiccant pouch
- Desiccant pouch with color indicator for VBM junction box
- Order No. 50000671

Post mounting kit

Post mounting kit
- Mounting kit for securing the Smartec CLD132/CLD134 on horizontal and vertical pipes (max. Ø 60 mm (2.36"))
- Material: stainless steel 1.4301 (AISI 304)
- Order No. 50062121

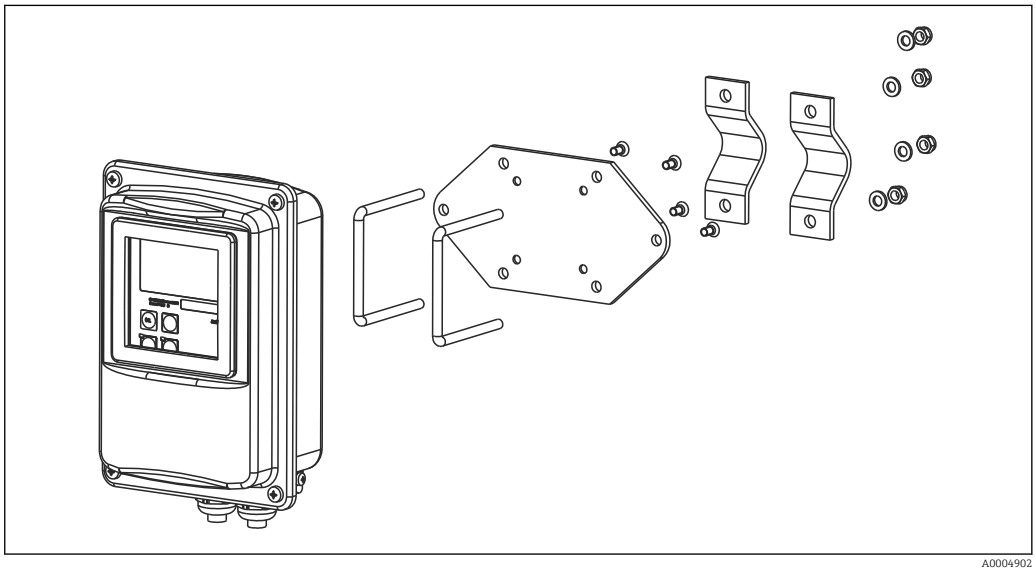

A0004902

20 Mounting kit for mounting the CLD132/CLD134 remote version on a post (base plate is included in the scope of delivery for the transmitter)

Software upgrade

Function upgrade
- Remote parameter set configuration (measuring range switching, MRS) and determination of temperature coefficient;
- Order No. 51501643
- The serial number of the device must be specified when ordering.

Optoscope

Optoscope
- Interface between the transmitter and PC/laptop for service purposes.
- The necessary Windows software "Scopeware" is supplied with the optoscope.
- The optoscope is supplied in a sturdy case along with all the necessary accessories.
- Order No.: 51500650

Calibration solutions

Conductivity calibration solutions CLY11

Precision solutions referenced to SRM (Standard Reference Material) by NIST for qualified calibration of conductivity measuring systems in accordance with ISO 9000

- CLY11-B, 149.6 µS/cm (reference temperature 25 °C (77 °F)), 500 ml (16.9 fl.oz)
  Order No. 50081903
- CLY11-C, 1.406 mS/cm (reference temperature 25 °C (77 °F)), 500 ml (16.9 fl.oz)
  Order No. 50081904
- CLY11-D, 12.64 mS/cm (reference temperature 25 °C (77 °F)), 500 ml (16.9 fl.oz)
  Order No. 50081905
- CLY11-E, 107.00 mS/cm (reference temperature 25 °C (77 °F)), 500 ml (16.9 fl.oz)
  Order No. 50081906

Technical Information TI00162C

Endress+Hauser
People for Process Automation