E40136

T-piece

T-PIECE R1/2-M26X1.5-R1/2

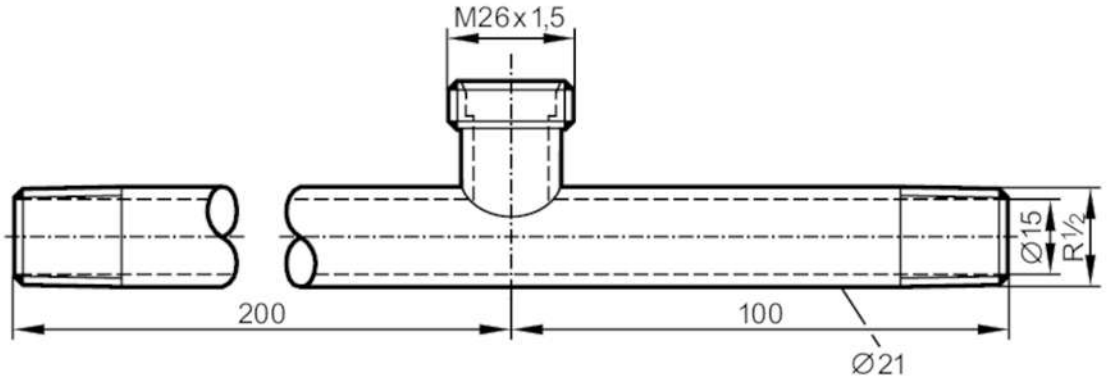

Application		
Design		for sensors and adapters with process connection M26x1,5
Flow range	[l/min]	0...10
Application		for industrial applications
Media		liquids and gases
Pressure rating	[bar]	30
Tests / approvals		
Pressure Equipment Directive		A possible classification to PED depends on the application and has to be carried out by the user / operator.
Pressure Equipment Directive EAC		The adapter is intended for use in devices, machines and installations that do not fall under the categories of the technical rule TR CU 032/2013.
Safety instructions		The compatibility between medium and product material has to be checked in all applications.
Mechanical data		
Weight	[g]	524.5
Materials		stainless steel (1.4404 / 316L)
Sensor connection		M26 x 1,5
Process connection		threaded connection R 1/2
Accessories		
Accessories (optional)		Adapter: 1 x M18 x 1,5, for direct connection of flow sensors, E40104
Remarks		
Pack quantity		1 pcs.