# E12663

## Connection cable

VDOAX050MSS0010H05STGH005MSS

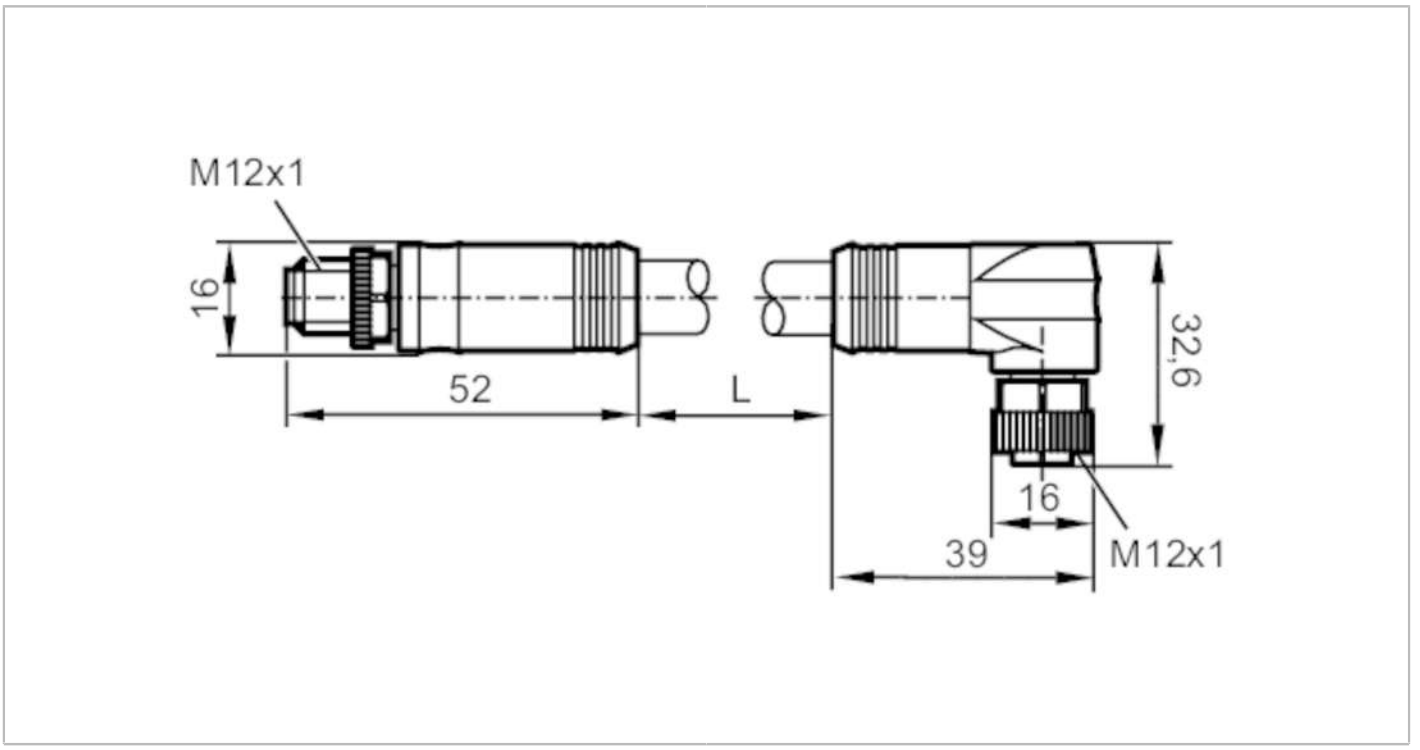


| | | |
|---|---|---|
| **Application** | | |
| Special feature | | Gold-plated contacts |
| Design | | power cable, L-coded |
| **Electrical data** | | |
| Operating voltage | [V] | 64 DC |
| Max. current load total | [A] | 16 |
| **Operating conditions** | | |
| Ambient temperature | [°C] | -40...90 |
| Protection | | IP 67 |
| **Mechanical data** | | |
| Weight | [g] | 2195 |
| Materials | | PP |
| Moulded-body material | | TPE |
| Material nut | | brass, nickel-plated |
| **Remarks** | | |
| Pack quantity | | 1 pcs. |

# E12663

## Connection cable

VDOAX050MSS0010H05STGH005MSS

### Electrical connection

Cable: 10.0 m, PUR, black, Ø 11.3 mm; 5 x 2.5 mm²

### Electrical connection - plug

Connector: 1 x M12, straight; coding: L; Moulded body: TPE; Locking: brass, nickel-plated; Contacts: gold-plated




### Electrical connection - 2

Connection

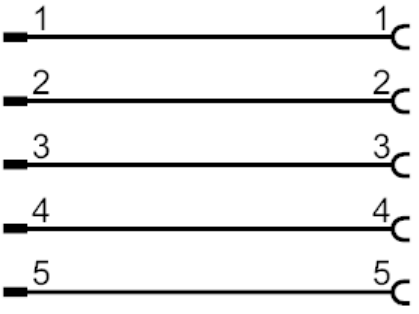


### Electrical connection - socket

Connector: 1 x M12, angled; coding: L; Moulded body: TPE; Locking: brass, nickel-plated; Contacts: gold-plated

