Brand of NTN corporation

Technical data

UKFC217H

Bearing units



Grey cast housing, radial insert ball bearing with adapter sleeve,seal with slinger

KIT CONTENT

UK217G2H, FC217

VISUAL (S)

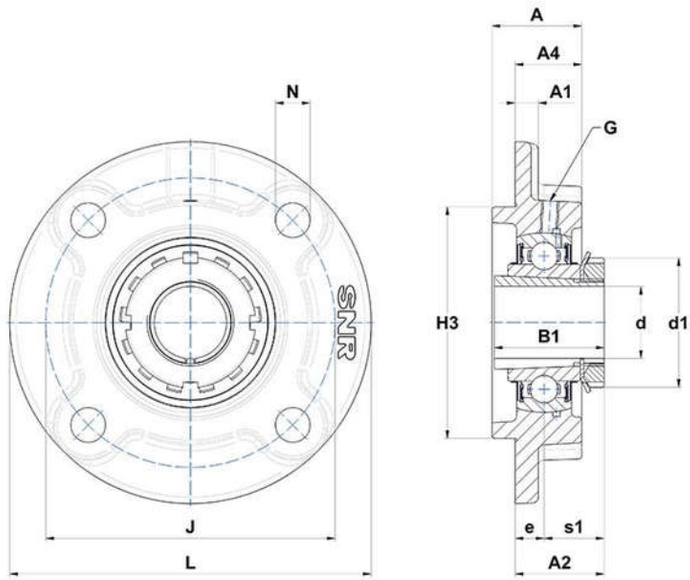

PRODUCT DEFINITION

Brand	SNR
A - Housing height	63 mm
A1 - Housing foot height / flange height	20 mm
A2 - Total height from mounting surface	58 mm
A4 - Housing height from mounting surface	45 mm
B - Width of Inner Ring	44 mm

UKFC217H
Bearing units

PRODUCT DEFINITION	
B1 - Overall width Inner Ring	82 mm
d - Shaft diameter	75 mm
d1 - Outer dia of eccent. Lock. collar / nut of adapter sleeve	110 mm
e - Distance mounting surface to bearing center	18 mm
G - Grease fitting	M10x1
H3 - Centering dia	180 mm
J - Mounting holes distance	208 mm
L - Housing width / diameter	250 mm
N - Mounting hole dimension	23 mm
s1 - Distance nut to middle of bearing raceway	40 mm

PRODUCT PERFORMANCE	
C - Dynamic load rating	83200000 mN
C0 - Static load rating	63800000 mN
Operating temperature min.	253,15 °K
Operating temperature max.	373,15 °K

OTHER FEATURES	
Mass	10,98 kg
Adapter sleeve designation	H2317