SCHMERSAL

Version 3.0 without Bluetooth

EN Operating instructions. . . . . .pages 1 to 16
Original

Content

1 About this document
1.1 Function. 1
1.2 Target group: authorised qualified personnel 1
1.3 Explanation of the symbols used. 1
1.4 Appropriate use. 2
1.5 General safety instructions 2
1.6 Warning about misuse. 2
1.7 Exclusion of liability 2

2 Product description
2.1 Purpose. 2
2.2 Ordering code 2
2.3 Special versions 2
2.4 Scope of delivery. 2
2.5 Technical Data. 3
2.6 Response time (reaction time) 3
2.7 Safety classification. 4
2.8 Functions. 4
2.8.1 Protective mode / Automatic 4
2.8.2 Restart Interlock (operation) 4
2.9 Self-test 4

3 Parameterisation

4 Mounting
4.1 General conditions 5
4.2 Protection field and approach 5
4.3 Alignment of the sensors. 6
4.4 Setting mode 6
4.4.1 Automatic setting mode. 6
4.4.2 Activating setting mode with 5-pin cable connection. 6
4.5 Safety distance 6
4.6 Increasing the safety distance in the event of risk of a protection field overlap. 7
4.6.1 Minimum distance to reflecting surfaces 8
4.7 Assembly. 9
4.8 Dimensions 10
4.8.1 Dimensions emitter and receiver SLC440COM 10
4.8.2 Dimensions emitter and receiver SLG440COM 10
4.9 Accessories, included in delivery 11
4.10 Optional accessory 11

5 Electrical connection
5.1 Wiring diagram 12
5.2 Wiring example with safety relay module SRB-E-301MC 12
5.3 Connector configuration Receiver, Emitter & Cable 12

6 Set-up and maintenance
6.1 Check before start-up 13
6.2 Maintenance 13
6.3 Regular check 13
6.4 Half-yearly inspection 13
6.5 Cleaning 13

7 Diagnostic
7.1 Status information 14
7.2 Fault diagnostic. 14

8 Disassembly and disposal
8.1 Disassembly 14
8.2 Disposal. 14

9 Appendix
9.1 Contact 14

10 EU Declaration of conformity

1. About this document

1.1 Function

This operating instructions manual provides all the information you need for the mounting, set-up and commissioning to ensure the safe operation and disassembly of the safety switchgear. The operating instructions must be available in a legible condition and a complete version in the vicinity of the device.

1.2 Target group: authorised qualified personnel

All operations described in this operating instructions manual must be carried out by trained specialist personnel, authorised by the plant operator only.

Please make sure that you have read and understood these operating instructions and that you know all applicable legislations regarding occupational safety and accident prevention prior to installation and putting the component into operation.

The machine builder must carefully select the harmonised standards to be complied with as well as other technical specifications for the selection, mounting and integration of the components.

1.3 Explanation of the symbols used

Information, hint, note:
This symbol indicates useful additional information.

Caution: Failure to comply with this warning notice could lead to failures or malfunctions.
Warning: Failure to comply with this warning notice could lead to physical injury and/or damage to the machine.

x.000 / 02.2022 / v.A. - 103045783-EN / A / 2022-02-25 / AE-Nr. -

1.4 Appropriate use

The products described in these operating instructions are developed to execute safety-related functions as part of an entire plant or machine. It is the responsibility of the manufacturer of a machine or plant to ensure the correct functionality of the entire machine or plant.

The safety switchgear must be exclusively used in accordance with the versions listed below or for the applications authorised by the manufacturer. Detailed information regarding the range of applications can be found in the chapter "Product description".

1.5 General safety instructions

The user must observe the safety instructions in this operating instructions manual, the country specific installation standards as well as all prevailing safety regulations and accident prevention rules.

Further technical information can be found in the Schmersal catalogues or in the online catalogue on the Internet: products.schmersal.com.

The information contained in this operating instructions manual is provided without liability and is subject to technical modifications.

There are no residual risks, provided that the safety instructions as well as the instructions regarding mounting, commissioning, operation and maintenance are observed.

Additional measures could be required to ensure that the system does not present a dangerous breakdown, when other forms of light beams are available in a special application (e.g. use of wireless control devices on cranes, radiation of welding sparks or effects of stroboscopic lights).

1.6 Warning about misuse

In case of improper use or manipulation of the safety switchgear, personal hazards or damages to machinery or plant components cannot be excluded. The relevant requirements of the standards EN ISO 13855 and EN ISO 13857 must be observed.

Only if the information described in this operating instructions manual are realised correctly, the safety function and therefore the compliance with the Machinery Directive is maintained.

1.7 Exclusion of liability

We shall accept no liability for damages and malfunctions resulting from defective mounting or failure to comply with this operating instructions manual. The manufacturer shall accept no liability for damages resulting from the use of unauthorised spare parts or accessories.

For safety reasons, invasive work on the device as well as arbitrary repairs, conversions and modifications to the device are strictly forbidden, the manufacturer shall accept no liability for damages resulting from such invasive work, arbitrary repairs, conversions and/or modifications to the device.

2. Product description

2.1 Purpose

The SLC/SLG440COM is a non-contact, self-testing safety guard (AOPD), which is used for the protection of hazardous points, hazardous areas and machine accesses. If one or more light beams are interrupted, the hazardous movement must be stopped.

The user must evaluate and design the safety chain in accordance with the relevant standards and the required safety level.

The entire concept of the control system, in which the safety component is integrated, must be validated to the relevant standards.

2.2 Ordering code

This operating instructions manual applies to the following types:

SLC440COM-ER-①-②

No.	Option	Description
①	xxxx	Protection field heights in mm available lengths: 0330, 0410, 0490, 0570, 0650, 0730, 0810, 0890, 0970, 1050, 1130, 1210, 1290, 1370, 1450, 1530*, 1610*, 1690*, 1770*, 1850*, 1930*
②	14	Resolution 14 mm, Range 0.3 … 7 m
	30	Resolution 30 mm, Range 0.3 … 10 m
	35	Resolution 35 mm, Range 0.3 … 7 m

* Resolution 14 mm:
protection field height 1530 … 1930 mm with a range of 0.3 m … 6 m
* Resolution 35 mm:
protection field height 1850 … 1930 mm with a range of 0.3 m … 6 m

SLG440COM-ER-①

No.	Option	Description
①		Distance between outermost beams:
	0500-02	500 mm, 2 beams
	0800-03	800 mm, 3 beams
	0900-04	900 mm, 4 beams

2.3 Special versions

For special versions, which are not listed in the order code, these specifications apply accordingly, provided that they correspond to the standard version.

2.4 Scope of delivery

- Emitter (E), connection cap, blue
- Receiver (R), connection cap, black
- Mounting kit MS-1100
- Operating instructions DE/EN
- Spacer MSD5, with protection field height of 1050 mm or higher

2.5 Technical Data

Standards:	EN 61496-1, EN 61496-2, EN ISO 13849-1, EN 62061
Material of the enclosure:	Aluminium
Protection field heights:	
- SLC440COM:	330 … 1930 mm
- SLG440COM:	500 mm, 800 mm, 900 mm
Detection ability for test bodies:	
- SLC440COM:	14 mm, 30 mm, 35 mm
- SLG440COM:	2 beams with resolution 500 mm [1)] 3 beams with resolution 400 mm [1)] 4 beams with resolution 300 mm [1)]
Range of the protection field:	
SLC440COM:	
- Resolution 14 mm:	Protection field height 330 to 1450 mm: 0.3 … 7.0 m Protection field height 1530 to 1930 mm: 0.3 … 6.0 m
- Resolution 35 mm:	Protection field height 330 to 1770 mm: 0.3 … 7.0 m Protection field height 1850 to 1930 mm: 0.3 … 6.0 m
- Resolution 30 mm:	0.3 … 10.0 m
SLG440COM:	0.3 … 12.0 m
Response time:	1 - 48 beams = 10 ms 49 - 144 beams = 20 ms 145 - 192 beams = 28 ms
Rated operating voltage:	24 VDC ±20% (PELV) supply unit $I_{max.}$ 1.0 A, to EN 60204 (power drop ≤ 20 ms)
Rated operating current:	
- Emitter:	max. 200 mA
- Receiver:	max. 700 mA
Wave length:	850 nm
Emitter, infrared emitted radiation	
- to DIN EN 12198-1:	Category 0
- to DIN EN 62471:	free group
Safety outputs	
OSSD1, OSSD2:	2 x short-circuit proof PNP semi-conductor outputs
Test impulse cycle OSSD:	750 ms
Test impulse length:	150 µs
Switching voltage HIGH [2)]:	15 … 26.4 V
Switching voltage LOW [2)]:	0 … 2 V
Switching current each OSSD:	0 … 250 mA
Leakage current [3)]:	1 mA
Load capacity:	0 … 50 nF
Load inductance [4)]:	0 … 2 H
Function:	protective mode/automatic, restart interlock, setting mode
Connection:	
- Emitter:	connector M12, 4-pole
- Receiver:	connector M12, 5-pole
Ambient temperature:	−10° C … + 50° C
Storage temperature:	−25° C … + 70° C
Degree of protection:	IP67 (EN 60529)
Resistance to vibration:	10 … 55 Hz to EN 60068-2-6
Resistance to shock:	10 g, 16 ms, to EN 60028-2-29
Version:	as of 2020 version 3.0

[1)] Resolution = beam distance + beam diameter 10 mm
[2)] to EN 61131-2
[3)] In case of failure, the leakage current flows to the OSSD cable. The downstream control element must recognise this state as LOW. A safety PLC must detect this state.
[4)] The load inductance generates an induced voltage during the switch-off, which compromises the downstream components (spark quenching element).

2.6 Response time (reaction time)

The response time depends on the height of the protection field, the resolution, the number of light beams.

SLC440COM Resolution 14 mm

Protection heights [mm]	Beams (lines) [Number]	Response time [ms]	Weight [kg]
330	32	10	0.5
410	40	10	0.7
490	48	10	0.8
570	56	20	0.9
650	64	20	1.0
730	72	20	1.1
810	80	20	1.3
890	88	20	1.4
970	96	20	1.5
1050	104	20	1.6
1130	112	20	1.7
1210	120	20	1.9
1290	128	20	2.0
1370	136	20	2.1
1450	144	20	2.2
1530	152	28	2.3
1610	160	28	2.5
1690	168	28	2.6
1770	176	28	2.7
1850	184	28	2.8
1930	192	28	2.9

SLC440COM Resolution 30 mm

Protection heights [mm]	Beams (lines) [Number]	Response time [ms]	Weight [kg]
330	16	10	0.5
410	20	10	0.7
490	24	10	0.8
570	28	10	0.9
650	32	10	1.0
730	36	10	1.1
810	40	10	1.3
890	44	10	1.4
970	48	10	1.5
1050	52	20	1.6
1130	56	20	1.7
1210	60	20	1.9
1290	64	20	2.0
1370	68	20	2.1
1450	72	20	2.2
1530	76	20	2.3
1610	80	20	2.5
1690	84	20	2.6
1770	88	20	2.7
1850	92	20	2.8
1930	96	20	2.9

SLC440COM Resolution 35 mm			
Protection heights [mm]	Beams (lines) [Number]	Response time [ms]	Weight [kg]
330	11	10	0.5
410	14	10	0.7
490	16	10	0.8
570	19	10	0.9
650	22	10	1.0
730	25	10	1.1
810	27	10	1.3
890	30	10	1.4
970	33	10	1.5
1050	36	10	1.6
1130	38	10	1.7
1210	41	10	1.9
1290	44	10	2.0
1370	47	10	2.1
1450	49	20	2.2
1530	52	20	2.3
1610	55	20	2.5
1690	58	20	2.6
1770	60	20	2.7
1850	63	20	2.8
1930	66	20	2.9

SLG440COM			
Beams [Number]	Beam distance [mm]	Response time [ms]	Weight [kg]
2	500	10	0.8
3	400	10	1.3
4	300	10	1.4

2.7 Safety classification

Standards:	EN ISO 13849-1, EN 62061
PL:	up to e
Control Category:	4
PFH value:	7.77 x 10^{-9} / h
SIL:	suitable for SIL 3 applications
Mission time:	20 years

2.8 Functions

The system consists of a receiver and an emitter. For the described functions, no further switching elements are required.

The system has the following operating modes:
- Protective mode automatic (factory setting)
  (automatic start after release of the protection field)
- Restart Interlock (manual reset)
- Setting mode

2.8.1 Protective mode / Automatic

In automatic mode the safety switching outputs (OSSD) are switched to the ON state if the protection field is clear. This is done without any authorization from a command device. This operating mode initiates an automatic restart of the machine if a previously uninterrupted protection zone becomes clear.



This operating mode may only be chosen in conjunction with the restart interlock (manual reset) of the machine. This operating mode must not be chosen, if persons may step behind the protection field.

Display

Indicator	Status
Red	OFF state (protection zone interrupted, OSSD signal low)
Green	ON state (protection zone uninterrupted, OSSD signal high)

2.8.2 Restart Interlock (operation)

In the operating mode restart interlock, the safety switching outputs (OSSDs) remain in the OFF condition after the power supply is applied or after the protection zone has been interrupted.

The AOPD does not switch the OSSDs to the ON state unless a command device (push button) applies a signal pulse at a duration of 100 ms to max. 1500 ms to the "authorised operation" input.
The receiver indicates readiness for authorisation by the yellow colour of the signal light. If the protection zone is not clear, the signal light remains red.



The restart interlock operating mode is selected with parameter setting (P1). If the restart interlock is not selected, protection/automatic mode is active.
See section Parameter setting.



The AOPD changes to setting mode if the command device (push button) is pressed for at least 2 seconds when the operating voltage is applied, see section Setting mode.

2.9 Self-test

The system performs a complete self-test and safety test within 2 seconds after the operating voltage has been switched on. If the protection field is free, the system switches to the ON condition (automatic mode). In case of an error, the outputs at the receiver do not switch to the ON state.
During operation, the system executes a cyclic self-test. Safety-relevant faults are detected within the reaction time and cause the outputs to be switched off.

3. Parameterisation

In parameter setting mode, individual adaptation of the operating parameters can be carried out on the receiver.

No.	Option	Description
P1	active/not active	active = restart interlock not active = protective mode / automatic
P2	active/not active	Bluetooth interface Factory setting: active

Parameter setting with adapter cable KA-0896

- Switch the supply voltage off.
- Connect the adapter cable to the device.
- Press and hold the integrated button and switch the supply voltage. The button can be released as soon as the indicator of the emitter changes from red to magenta or cyan.
- The status of parameter 1 is now indicated. The signal lamp pulses once in magenta (parameter is not active) or cyan (parameter is active).
- Press the button briefly to change to the next parameter. The number of light impulses indicates the parameter number. The colour indicates the parameter status (magenta = not active, cyan = active).
- Press and hold the button (2.5 seconds < T < 6 seconds) and the status of the current parameter changes from **active** to **not active** or from **not active** to **active**. While the button is pressed, the indicator changes after 1.5 seconds to the colour of the current status. Pressing and holding the button longer T > 2.5 seconds indicates the colour of the new status. The button can now be released to save. If the button is pressed and held for longer than 6 seconds, the indicator goes out and the change is not accepted.
- To exit the parameter setting function, switch off the supply voltage and restore the original wiring.

Parameter setting with 5-pin connection cable without adapter cable KA-0896

Alternatively the parameter setting can be performed with a command device (pushbutton) as follows:

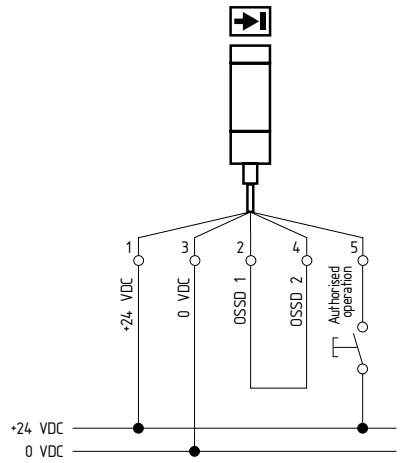

- Switch the supply voltage off.
- Connect OSSD1 with OSSD2.
- Connect a pushbutton between input "Reset" and +24V.
- Press the pushbutton while switching on the supply voltage on. The button can be released as soon as the indicator of the emitter changes from red to magenta or cyan.
- For the parameter setting, follow the instructions as described in the section "Parameter setting with adapter cable KA-0896".

4. Mounting

4.1 General conditions

The following guidelines are provided as preventive warning notices to ensure a safe and appropriate handling. These guidelines are an essential part of the safety instructions and must therefore always be observed and respected.

- The AOPD must not be used on machines, which can not be stopped electrically in case of emergency.
- The safety distance between the AOPD and a hazardous machine movement must always be observed and respected.
- Additional mechanical safety guards must be installed so that the operator has to pass through the protection field to reach the hazardous machine parts.
- The AOPD must be installed so that the personnel always must be within the detection zone when operating the machine. An incorrect installation can lead to serious injuries.
- Never connect the outputs to +24VDC. If the outputs are wired to +24VDC, they are in ON state, as a result of which they are unable to stop a hazardous situation occurring on the application/machine.
- The safety inspections must be conducted regularly.
- The AOPD must not be exposed to inflammable or explosive gasses.
- The connecting cables must be connected in accordance with the installation instructions.
- The fixing screws of the end caps and the mounting angle must be firmly tightened.

4.2 Protection field and approach

The protection field of the AOPD consists of the entire range located between the protection field markings of emitter and receiver. Additional protective devices must ensure that the operator has to pass through the protection field to reach the hazardous machine parts.
The AOPD must be installed so that the personnel is always located within the detection zone of the safety device when operating the hazardous machine parts to be secured.

Correct installation

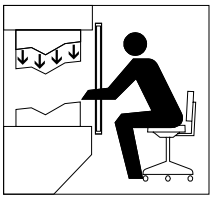

Hazardous machine parts can only be reached after passing through the protection field.

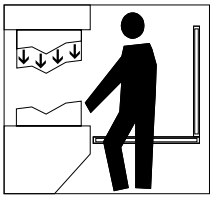

The presence of staff members between the protection field and hazardous machine parts must be prevented/avoided (protection against stepping over).

Unauthorised installation

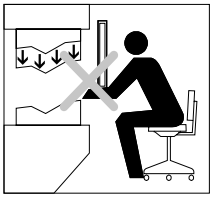

Hazardous machine parts can be reached without passing through the protection field.

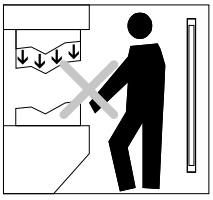

The presence of staff members between the protection field and hazardous machine parts is possible.

4.3 Alignment of the sensors

Procedure:

1. Emitter and receiver must be fitted parallel to each other and at the same height.
2. First turn the emitter and then the receiver so that the front covers are opposite each other until the integrated signal lamp lights up green (operating mode automatic) or yellow (operating mode restart interlock).
3. Adjust the emitter and receiver so that they are in the middle of the angular range for a green or yellow indication. Fix the position with the two screws for each mounting bracket.

4.4 Setting mode

In this operating mode, the signal strength is indicated by blue light pulses on the indicator; the safety switch outputs OSSD always remain in the OFF state. The better the alignment, the higher the frequency of the light pulses. Alignment is optimal when the pulsed signal switches over to continuous light. If there is no optical synchronisation between the emitter and the receiver, a light pulse is emitted every three seconds.

4.4.1 Automatic setting mode

To activate the setting mode, the lower beam of the AOPD (seen from the connecting cable side) must be interrupted for 10 seconds on system start-up.
Once the setting mode has been started, there will be a blue light pulse from the signal light.
If there is sufficiently good alignment for a period of 20 seconds, the setting mode will be terminated automatically, whereupon the AOPD will restart with a reset followed by a self-test.

4.4.2 Activating setting mode with 5-pin cable connection

Apply a voltage of +24V on the "Reset" input for at least 2 seconds when the system starts (e.g. by pressing the reset pushbutton). The receiver unit starts in setting mode. The pushbutton can be released as soon as the indicator changes from red to blue.

Display

Blue indicator	Signal status
static ON	Best possible
pulses at 20 Hz	Good
pulses at 10 Hz	Adequate
1 Hz	Signal strength too low (signal reserve, contamination)
1 pulse every three seconds	No signal

4.5 Safety distance

The safety distance is the minimum distance between the protection field of the safety light curtain and the hazardous area. The safety distance must be observed to ensure that the hazardous area cannot be reached before the hazardous movement has come to standstill.



The safety distance between the safety light curtain / light grid and the hazardous point must always be respected and observed. If a person reaches the hazardous point before the hazardous movement has come to a standstill, he or she is exposed to serious injuries.



To calculate the minimum distances for the protective equipment with regard to the hazardous point, standards EN ISO 13855 and EN ISO 13857 must be observed.

Calculation of the safety distance to EN ISO 13855 and EN ISO 13857

The safety distance depends on the following elements:

- Stopping time of the machine (calculation by run-on time measurement)
- Response time of the machine and the safety light curtain and the downstream safety-monitoring module (entire safety guard)
- Approach speed
- Resolution of the safety light curtain

Calculation of the safety distance
Safety light curtains SLC440COM

The safety distance for resolutions 14 mm up to 40 mm is calculated by means of the following formula:

(1) S = 2000 mm/s * T + 8 (d - 14) [mm]

S = Safety distance [mm]
K = Approach speed
T = Total reaction time (machine run-on time, reaction time of the safety guard, relays, etc.)
d = Resolution of the safety light curtain

The approach speed is covered with a value of 2000 mm/s. If value S ≤ 500 mm after the calculation of the safety distance, then use this value.

If value S ≥ 500 mm, recalculate the distance:

(2) S = 1600 mm/s * T + 8 (d - 14) [mm]

If the new value S > 500 mm, use this value as safety distance.
If the new value S < 500 mm, use a minimum distance of 500 mm.

Example:
Response time of the safety light curtain = 10 ms
Resolution of the safety light curtain = 14 mm
Stopping time of the machine = 330 ms

S = 2000 mm/s * (330 ms + 10 ms) + 8(14 mm - 14 mm)
S = 680 mm
S ≥ 500 mm, therefore new calculation with K = 1600 mm/s
S = 544 mm

Safety distance to the hazardous area

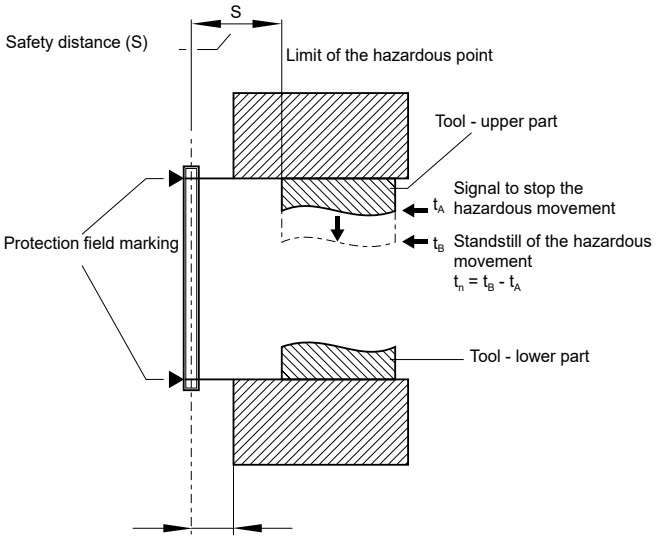

≤ 75 mm = max. distance for protection against stepping over
To prevent persons from stepping over the protection field this dimension must be imperatively respected and observed.

Calculation of the safety distance for the multi-beam light grid SLG440COM

S = (1600 mm/s * T) + 850mm

S = Safety distance [mm]
T = Total reaction time (machine run-on time, reaction time of the safety guard, relays, etc.)
K = Approach speed 1600 mm/s
C = Safety supplement 850 mm

Example
Response time of the SLG440COM = 10 ms
Stopping time of the machine T = 170 ms

S = 1600 mm/s * (170 ms + 10 ms) + 850 mm
S = 1138 mm

The following mounting heights must be observed:

Number of beams	Mounting height above reference floor in mm
2	400, 900
3	300, 700, 1100
4	300, 600, 900, 1200

Safety distance to the hazardous area

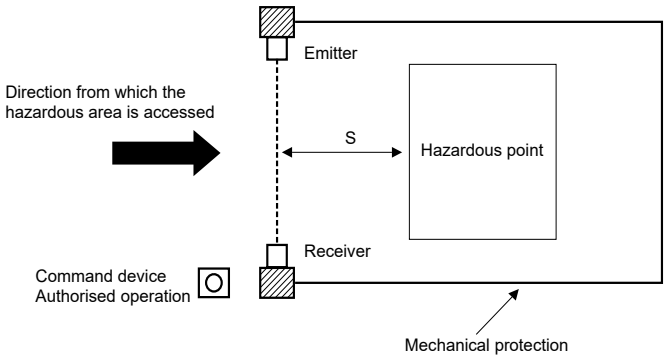

The formulas and calculation examples are related to the vertical set-up (refer to drawing) of the safety light grid with regard to the hazardous point. Please observe the applicable harmonised EN standards and possible applicable national regulations.

The safety distance between the safety light curtain / light grid and the hazardous point must always be respected and observed. If a person reaches the hazardous point before the hazardous movement has come to a standstill, he or she is exposed to serious injuries.

To calculate the minimum distances of the safety guards with regards to the hazardous point, the EN ISO 13855 and EN ISO 13857 must be observed.
If an overlap of the protection field is possible, take care with the calculation of the safety distance referring to additional CRO according to the table A1 as per norm EN ISO 13855.

4.6 Increasing the safety distance in the event of risk of a protection field overlap

If an overlap of the protection field is possible, take care with the calculation of the safety distance referring to additional C_{RO} according to the table A1 as per norm EN ISO 13855.

The norm EN ISO 13855 defines two types of safety distances,
- Access **through** the protection area with an additional distance C, according to the resolution of the AOPD
- Access **over** the protection area with an additional distance C_{RO} according to table 1

If it is possible to reach through the hazardous area (vertical alignment) then both values C and C_{RO} have to be determined. The higher value of both is to be used for calculating the safety distance. Calculating the safety distance with C_{RO}:

S_{CRO} = K x T + C_{RO}
K = Approach speed
T = Total response time (machine run-on time, response time of the safety guard, relays, etc.)
C_{RO} = Additional distance due to protection field overlap to the hazardous area with part(s) of body.

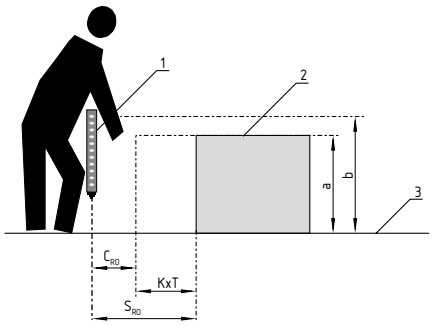

1 Safety sensor
2 Hazardous point
3 Floor
a Height of the hazardous point
b Height of the upper edge of the protection area of the AOPD

Reaching through the protective area of a non-contact functioning guard system (extract EN ISO 13855)

Height of the hazardous point a [mm]	Height b of the upper edge of the protection area of the non-contact functioning guard system 900 | 1000 | 1100 | 1200 | 1300 | 1400 | 1600 | 1800 | 2000 | 2200 | 2400 | 2600 Additional distance C_{RO} to the hazardous area [mm]											
2600	0	0	0	0	0	0	0	0	0	0	0	0
2500	400	400	350	300	300	300	300	300	250	150	100	0
2400	550	550	550	500	450	450	400	400	300	250	100	0
2200	800	750	750	700	650	650	600	550	400	250	0	0
2000	950	950	850	850	800	750	700	550	400	0	0	0
1800	1100	1100	950	950	850	800	750	550	0	0	0	0
1600	1150	1150	1100	1000	900	850	750	450	0	0	0	0
1400	1200	1200	1100	1000	900	850	650	0	0	0	0	0
1200	1200	1200	1100	1000	85	800	0	0	0	0	0	0
1000	1200	1150	1050	950	750	700	0	0	0	0	0	0
800	1150	1050	950	800	500	450	0	0	0	0	0	0
600	1050	950	750	550	0	0	0	0	0	0	0	0
400	900	700	0	0	0	0	0	0	0	0	0	0
200	600	0	0	0	0	0	0	0	0	0	0	0
0	0	0	0	0	0	0	0	0	0	0	0	0

Determination of the additional distance C_{RO} from the table:
1) Locate the height of the upper edge of the hazardous area **a** (left table column)
2) Locate the height of the protection area **b** (upper table row)
3) C_{RO} is to be taken from the crossing point of both axes

If the known value for **a** and **b** is between the table values, the next higher value is to be used.

4.6.1 Minimum distance to reflecting surfaces

During the installation, the effects of reflecting surfaces must be taken into account. In case of an incorrect installation, interruptions of the protection field could possibly not be detected, which could lead to serious injuries. The hereafter-specified minimum distances with regard to reflecting surfaces (metal walls, floors, ceilings or parts) must be imperatively observed.

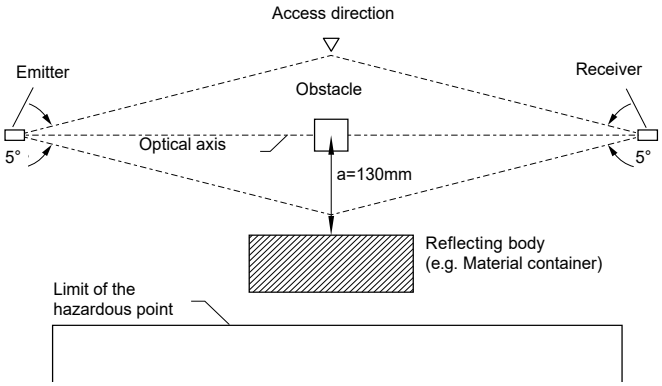

Safety distance a

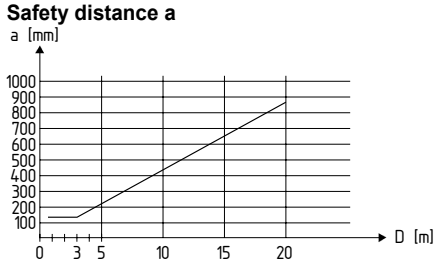

Calculate the minimum distance to reflecting surfaces as a function of the distance with an aperture angle of ± 2.5° degrees or use the value from the table below:

Distance between emitter and receiver [m]	Minimum distance a [mm]
0.2 … 3.0	130
4	175
5	220
7	310
10	440
12	530

Formula: a = tan 2.5° x L [mm]

a = Minimum distance to reflecting surfaces
L = Distance between emitter and receiver

4.7 Assembly

The AOPD should be installed in such a way that interference with neighbouring safety light barriers / grids of the same type (AOPD) is excluded.
If two or more applications are arranged so that mutual interference is possible, this should be eliminated with a partition.

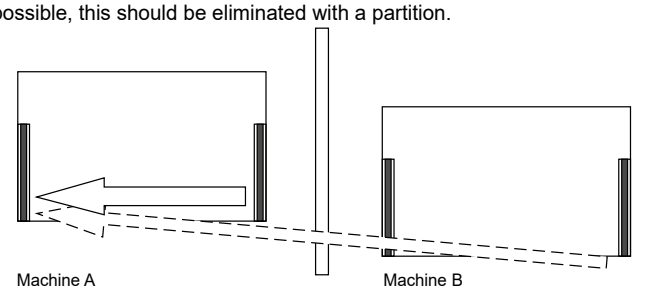

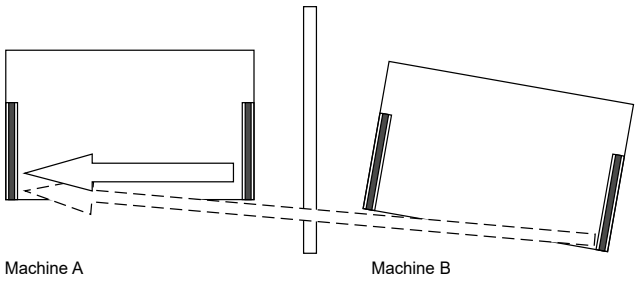

Mutual interference of the sensors is to be prevented through appropriate installation. If this is not guaranteed, contact the manufacturer.

4.8 Dimensions

4.8.1 Dimensions emitter and receiver SLC440COM

All measurements in mm.

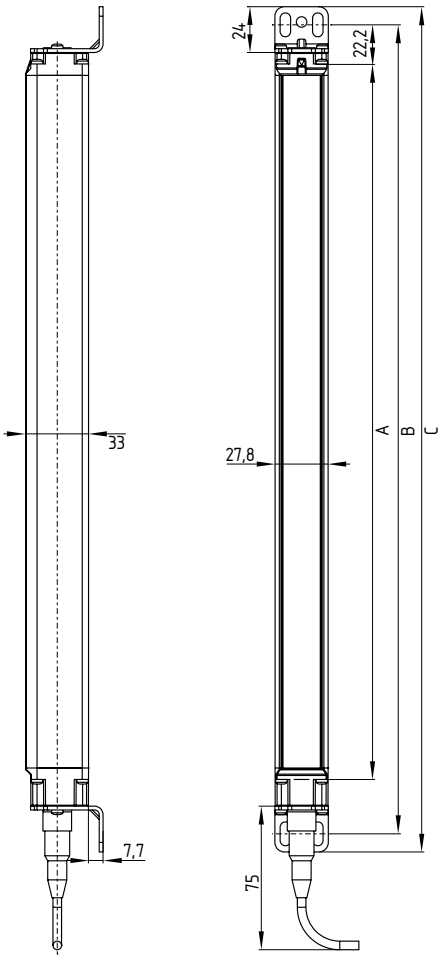

Type	A Protected height ± 1	B Mounting dimension ± 1	C Total length ± 1
SLC440COM-ER-0330-XX	330	384	403
SLC440COM-ER-0410-XX	410	464	483
SLC440COM-ER-0490-XX	490	544	563
SLC440COM-ER-0570-XX	570	624	643
SLC440COM-ER-0650-XX	650	704	723
SLC440COM-ER-0730-XX	730	784	803
SLC440COM-ER-0810-XX	810	864	883
SLC440COM-ER-0890-XX	890	944	963
SLC440COM-ER-0970-XX	970	1024	1043
SLC440COM-ER-1050-XX	1050	1104	1123
SLC440COM-ER-1130-XX	1130	1184	1203
SLC440COM-ER-1210-XX	1210	1264	1283
SLC440COM-ER-1290-XX	1290	1344	1363
SLC440COM-ER-1370-XX	1370	1424	1443
SLC440COM-ER-1450-XX	1450	1504	1523
SLC440COM-ER-1530-XX	1530	1584	1603
SLC440COM-ER-1610-XX	1610	1664	1683
SLC440COM-ER-1690-XX	1690	1744	1763
SLC440COM-ER-1770-XX	1770	1824	1843
SLC440COM-ER-1850-XX	1850	1904	1923
SLC440COM-ER-1930-XX	1930	1984	2003

4.8.2 Dimensions emitter and receiver SLG440COM

All measurements in mm.

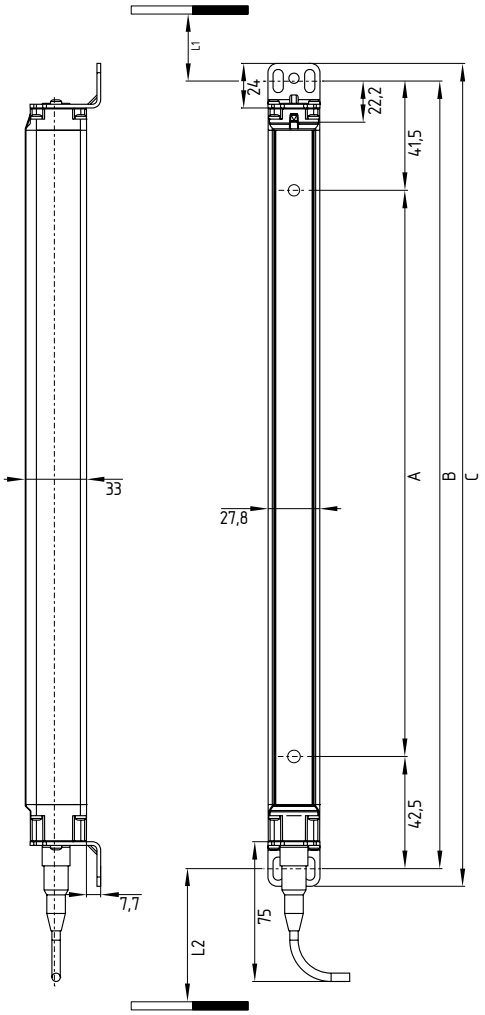

Type	A Beam distance	B Mounting dimension	C Total length	L1	L2
SLG440COM-ER-0500-02	500	584	603	358.5	357.5
SLG440COM-ER-0800-03	400	884	903	258.5	257.5
SLG440COM-ER-0900-04	300	984	1003	258.5	257.5

L1 = Mounting distance (mm) between floor and slotted hole centre (short end cap)
L2 = Mounting distance (mm) between floor and slotted hole centre (diagnostic window)

The overall length Ls (dimension end cap with regard to the cable connection up to the connector M12) of the sensors is calculated in the following way:

Ls = size B - 13 mm

Example: SLC440COM-ER-0970-xx
Ls = 1024 - 13 = 1011 mm

4.9 Accessories, included in delivery

Mounting kit MS-1100
The mounting kit consists of 4 pcs. steel angles and 8 pcs. fixing screws (Type Torx plus 10IP).

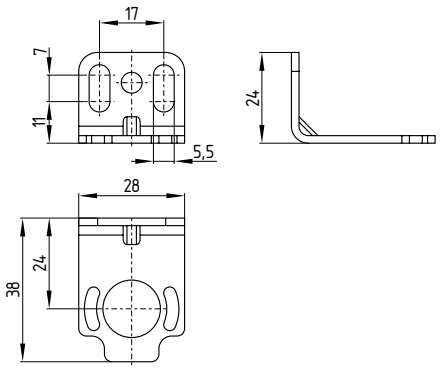

MSD5 spacer
The kit consists of 2 pcs. spacers. Available as of a protection zone height of 1050 mm. Mounting must be used in case of vibrations.

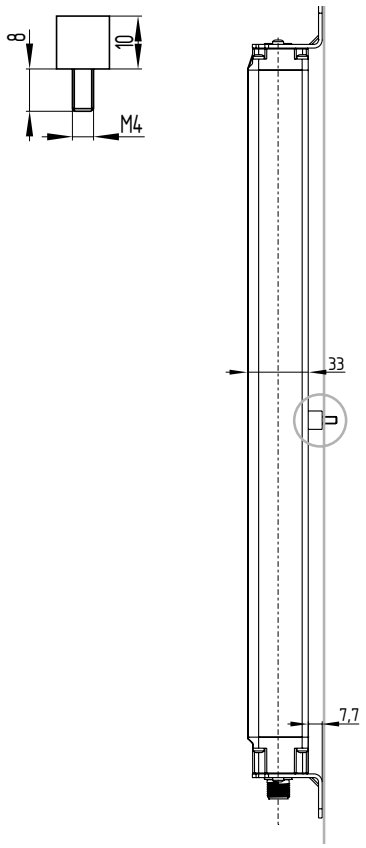

4.10 Optional accessory

Centre support MS-1110
Mounting kit consists of 2 pcs. steel angles and 4 pcs. spacers for central fixing

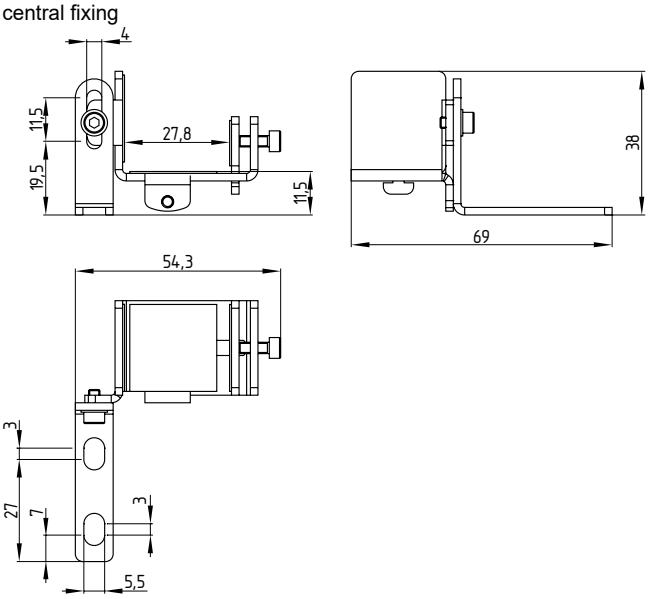

Connecting cable for emitter / receiver (4-pole)

Article No.	Designation (description)	Length
101207741	KA-0804 (female connector M12, 4-pole)	5 m
101207742	KA-0805 (female connector M12, 4-pole)	10 m
101207743	KA-0808 (female connector M12, 4-pole)	20 m

Connecting cable for receiver (5-pole)*

Article No.	Designation (description)	Length
103010816	A-K5P-M12-S-G-5M-BK-2-X-A-4-69 (Female connector M12, 5-pole)	5 m
103010818	A-K5P-M12-S-G-10M-BK-2-X-A-4-69 (Female connector M12, 5-pole)	10 m
103010820	A-K5P-M12-S-G-15M-BK-2-X-A-4-69 (Female connector M12, 5-pole)	15 m

* For use in the operating mode Restart Interlock (manual reset)

Adapter cable for alignment kit:

Article No.	Designation (description)	Length
103034548	KA-0827 (cable for alignment mode. M12 coupling (female/male connector), 4-pole)	0.3 m

Adapter cable for parameter setting

Article No.	Designation (description)	Length
103016100	KA-0896 (pushbutton with command device)	2.5 m

Test rod PLS
The test rod is used for testing the protection field.

MSD4 Vibration damper
Kit consists of: 8 pcs. vibration dampers 15 x 20 mm, 8 pcs. M5 cylinder head screws with hexagon socket, 8 pcs. spring washers. Mounting using MS-1100.

The MSD4 vibration damper kit is recommend to be used for damping vibrations and oscillations on the AOPD. For applications with higher mechanical stresses, e.g. presses, punching machines, we recommend the MSD4 kit. In this way, the availability of the AOPD is increased.

5. Electrical connection

5.1 Wiring diagram

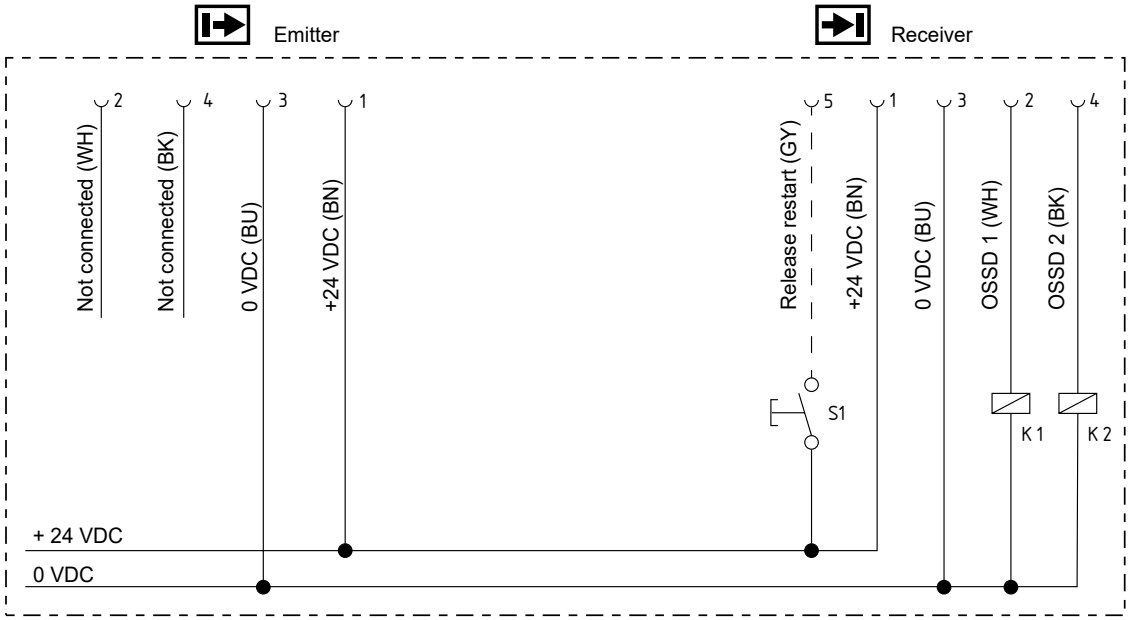

Protective mode / Automatic active:
Delivery state (Pushbutton S1 not connected)

Restart Interlock (manual reset) active:
Refer to the chapter: operating mode activate restart interlock
(Pushbutton 1 connected)

K1, K2: Relay for processing the switching outputs OSSD 1,OSSD 2
S1: Pushbutton for restart (optional)

5.2 Wiring example with safety relay module SRB-E-301MC

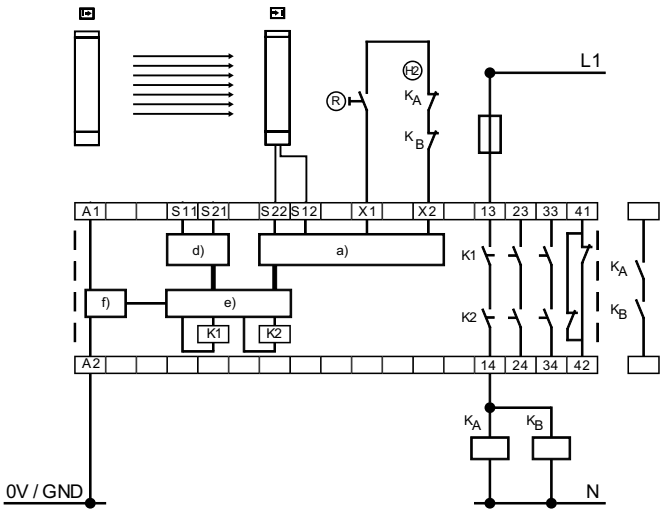

Safety relay module SRB-E-301MC
- Contactor control KA and KB at X1/X2
- Command device Ⓡ Restart interlock restart at X1/X2
- OSSD outputs at S12 and S22
- QS-switch = nQS, deactivate cross-wire short detection

5.3 Connector configuration Receiver, Emitter & Cable

RECEIVER
M12, 5-pole

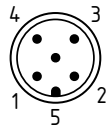

		Designation	Description
1	BN	24 VDC	Power supply
2	WH	OSSD 1	Safety output 1
3	BU	0 VDC	Power supply
4	BK	OSSD 2	Safety output 2
5	GY	Release/restart interlock	Acknowledgement restart interlock

It is possible to use the Automatic operating mode with a 4-pole cable (without pin 5 restart interlock).

EMITTER
M12, 4-pole

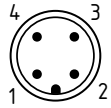

		Designation	Description
1	BN	24 VDC	Power supply
2	WH	Not used	Do not connect a signal (do not wire)
3	BU	0 VDC	Power supply
4	BK	Not used	Do not connect a signal (do not wire)

The colour codes are only valid for the cable types mentioned below "optional accessories".

6. Set-up and maintenance

6.1 Check before start-up

Prior to start-up, the following items must be checked by the responsible person.

Wiring connection check prior to start-up

1. A 24 V power adapter (see technical data) is required for the power supply. A power downtime of 20 ms must be bridged.
2. Presence of a voltage supply with correct polarity at the AOPD.
3. The connecting cable of the emitter is correctly connected to the emitter and the connecting cable of the receiver is correctly connected to the receiver.
4. The double insulation between the light curtain output and an external potential is guaranteed.
5. The outputs OSSD1 and OSSD2 are not connected to +24 VDC.
6. The connected switching elements (load) are not connected to +24 VDC.
7. If two or more AOPD are used within close range compared to each other, an alternating arrangement must be observed. Any mutual interference of the systems must be prevented.

Switch on the AOPD and check the operation in the following way:
The component performs a system test during approx. 2 seconds after the operating voltage has been switched on. After that, the outputs are enabled if the protection field is not interrupted. The status indication at the receiver is on.



In case of incorrect functionality, please follow the instructions listed in the chapter Fault diagnostic.

6.2 Maintenance



Do not use the AOPD before the next inspection is terminated. An incorrect inspection can lead to serious and mortal injuries.

Conditions

For safety reasons, all inspection results must be archived. The operating principle of the AOPD and the machine must be known in order to be able conducting an inspection. If the fitter, the planning technician and the operator are different persons, please make sure that the user has the necessary information at his disposal to be able to conduct the maintenance.

6.3 Regular check

A regular visual inspection and functional test, including the following steps, is to be performed:

1. The component does not have any visible damages.
2. The optics cover is not scratched or soiled.
3. Hazardous machinery parts can only be accessed by passing through the protection field of the AOPD.
4. The staff remains within the detection area, when works are conducted on hazardous machinery parts.
5. The safety distance of the application exceeds the mathematically calculated one.

Operate the machine and check whether the hazardous movement stops under the hereafter mentioned circumstances.

1. Hazardous machine parts do not move when the protection field is interrupted.
2. The hazardous machine movement is immediately stopped, when the protection field is interrupted with the test rod directly at the emitter, directly at the receiver and in the middle between the emitter and the receiver.
3. There is no hazardous machine movement when the test rod is within the protection field.
4. The hazardous machine movement comes to standstill, when the voltage supply of the AOPD is switched off.

6.4 Half-yearly inspection

The following items must be checked every six months or if a machine setting is changed.

1. Machine stops or does not inhibit any safety function.
2. No machine modification or connection change, which affects the safety system, has taken place.
3. The outputs of the AOPD are correctly connected to the machine.
4. The total response time of the machine does not exceed the response time calculated during the first commissioning.
5. The cables, the connectors, the caps and the mounting angles are in perfect condition.

6.5 Cleaning

If the optics cover of the sensors is extremely soiled, the OSSD outputs may be disabled. Clean with a clean, soft cloth with low pressure.
The use of agressive, abrasive or scratching cleaning agents, which could attack the surface, is prohibited.

7. Diagnostic

7.1 Status information

Signalisation of the status occurs at the receiver end cap.

Status display – receiver

Operating condition	Display	Description
OSSD ON	Green, static	Status of OSSD safety switch outputs is ON, protection field is clear.
OSSD OFF	Red, static	Status of OSSD safety switch outputs is OFF, the protection field is interrupted.
Restart interlock (manual reset)	Yellow, static	Restart interlock is active, protection zone is clear, enable signal expected.
Error	Red, pulses	Fault status, see section on fault indication
Parameter setting	Cyan, pulses Magenta, pulses	See section Parameter setting.
Alignment kit, indication of signal quality	Blue, pulses	See section Setting mode.
Indication of signal quality	Green, one pulse for every 5 seconds	Dirt indicator, signal strength insufficient

Status display – emitter

Signalisation of the general status occurs at the emitter end cap.

Operating condition	Display	Description
Emitting	static	Standard operation, emitter active
	Pulses	Fault status

7.2 Fault diagnostic

The status indicator on the receiver lights up red permanently and indicates the fault number every second with short OFF pulses.

Status indicator	Fault feature
1 impulse	Wiring fault
2 impulses	Voltage fault, check the supply voltage
3 impulses	Error output OSSD1 or OSSD2
4 impulses	Internal error diagnostic
6 impulses	Incorrect configuration data
7 impulses	Other internal fault

8. Disassembly and disposal

8.1 Disassembly

The safety switchgear must be disassembled in a de-energised condition only.

8.2 Disposal

The safety switchgear must be disposed of in an appropriate manner in accordance with the national prescriptions and legislations.

9. Appendix

9.1 Contact

Consultancy / Sales:
K.A. Schmersal GmbH & Co. KG
Möddinghofe 30
D-42279 Wuppertal
Tel.: +49 (0)2 02 - 64 74 - 0
Fax: +49 (0)2 02 - 64 74 - 100

You will also find detailed information regarding our product variety on our website: products.schmersal.com.

Repair/shipping:
Safety Control GmbH
Am Industriepark 2a
D-84453 Mühldorf / Inn
Tel.: +49 (0) 86 31 - 1 87 96 - 0
Fax: +49 (0) 86 31 - 1 87 96 - 1

10. EU Declaration of conformity

EU Declaration of conformity

SCHMERSAL

Original

Safety Control GmbH
Am Industriepark 2a
84453 Mühldorf / Inn
Germany

We hereby certify that the hereafter described components both in their basic design and construction conform to the applicable European Directives.

Name of the component:
Series SLC440COM
Series SLG440COM

Type:
See ordering code

Description of the component:
Safety light curtain / safety light grid

Relevant Directives:

Machinery Directive	2006/42/EC
EMC-Directive	2014/30/EU
RoHS-Directive	2011/65/EU

Applied standards:
EN 61496-1:2013
EN 61496-2:2013
EN ISO 13849-1:2015
EN 62061:2005 + Cor.:2010 + A1:2013 + A2:2015

Notified body for the prototype test:
TÜV NORD CERT GmbH
Langemarckstr. 20, 45141 Essen
ID n°: 0044

EC-prototype test certificate:
44 205 13144609

Person authorised for the compilation of the technical documentation:
Oliver Wacker
Möddinghofe 30
42279 Wuppertal

Place and date of issue:
Mühldorf, February 24, 2022

Authorised signature	Authorised signature
Klaus Schuster	**Christian Spranger**
Managing Director	Managing Director

SLC-SLG440COM_V3oB-A-EN

The currently valid declaration of conformity can be downloaded from the internet at products.schmersal.com.

K.A. Schmersal GmbH & Co. KG
Möddinghofe 30, 42279 Wuppertal
Germany
Phone: +49 202 6474-0
Telefax: +49 202 6474-100
E-Mail: info@schmersal.com
Internet: www.schmersal.com