87045 LIMOGES Cedex
Telephone: 33 0 5 55 06 87 87 - Fax: 33 0 5 55 06 88 88

IP 66/67 - 55 IEC pin sockets

Cat. No(s): 0 511 06/07/10/11/25/26/27/30/31/46/47/50/51/55/56/57/60/61 0 511 75/76/77/80/81/85/86/87/90/91 - 0 520 29 - 0 522 29/89 - 0 529 26/36/ 0 529 40/46/86/90 - 0 530 06/07/10/11/45/46/47/50/51/56/57/60/61/75/76/77/80 0 530 81/85/86/87/90/91 - 0 538 89 - 0 593 26/27/36/37/46/47/76/86/87 0 594 27/28/29/37/38/47/48/49/77/78 - 0 538 87/88 - 0 595 02/03/12/13/22/23/32 0 595 33/42/43/44/45 - 6 581 01/03/13/31/36 - 6 582 05/15/25

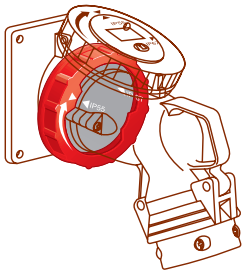

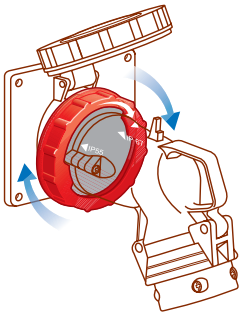

CONTENTS Pages

1. General characteristics 1
2. Range 1-2
3. Dimensions 3-6
4. Technical characteristics 6
5. Wiring 7
6. Use 7
7. Wiring diagram 8
8. Standards and decree 8

1. GENERAL CHARACTERISTICS

- **Connected** IP 55 guaranteed with flap closed(1) on the plug
- **Unconnected** IP 55 guaranteed when flap is closed(1)
- **Connected and unconnected** IP 66/67 obtained by locking the ring(1)
- Material: plastic
- IK 09
- In order to facilitate the installation of the new range and maintenance of the existing IP 67 stock, the Hypra IP 66/67 - 55 sockets are provided with:

→ identical single fixing centres
→ a design differentiated by using reverse colours.

- Captive slotted connecting screws.
- Captive external screws, stainless steel.

(1)With a couple of IP 66/67 - 55 products

2. RANGE

Classic inclined panel mounting sockets.

100 to 130 V	16 A	2 P+ E	0 511 25
200 to 250 V	16 A	2 P+ E	0 511 26
		3 P + E	0 511 27
	63 A	2 P+ E	0 593 26
		3 P + E	0 593 27
380 to 415 V	16 A	3 P + E	0 511 30
		3 P + N + E	0 511 31
	63 A	3 P + E	0 594 27
		3 P + N + E	0 594 28
	125 A	3 P + E	0 595 12
		3 P + N + E	0 595 13
440 to 460 V earth at 11 h	16 A	3 P + E	6 581 31
	63 A	3 P + E	6 582 25
480 to 500 V	63 A	3 P + E	0 594 29

Box to combine with classic inclined panel mounting sockets to obtain a surface mounting socket.

		Simple box	Through wiring box
16 A	2 P + E	0 520 29	0 520 89
16 A	3 P + E	0 522 29	0 522 89
16 A	3 P + N + E	0 522 29	0 522 89
63 A	2 P + E 3 P + E 3 P + N + E		0 538 89

2. RANGE *(continued)*

Panel mounting sockets with single fixing centres.

200 to 250 V	16 A	2 P+ E	0 511 46
		3 P + E	0 511 47
	32 A	2 P + E	0 530 46
		3 P + E	0 530 47
380 to 415 V	16 A	3 P + E	0 511 50
		3 P + N + E	0 511 51
	32 A	3 P + E	0 530 50
		3 P + N + E	0 530 51
440 V earth at 3 h	32 A	3 P + E	0 529 26
440 to 460 V earth at 11 h	32 A	3 P + E	6 581 36

Nb : The inclined panel mounting sockets with single fixing centres 16 A can't be fixed on box.

Box to combine with 32 A panel mounting sockets with single fixing centres.

		Simple box	Through wiring box
32 A	2 P + E 3 P + E 3 P + N + E	0 529 40	0 529 90

Surface mounting socket.

200 to 250 V	63 A	2 P + E	0 593 36
		3 P + E	0 593 37
	63 A	3 P + E	0 594 37
		3 P + N + E	0 594 38
380 to 415 V	125 A	3 P + E	0 595 02
		3 P + N + E	0 595 03

IP 66/67 - 55 IEC pin sockets

Cat. No(s): 0 511 06/07/10/11/25/26/27/30/31/46/47/50/51/55/56/57/60/61 0 511 75/76/77/80/81/85/86/87/90/91 - 0 520 29 - 0 522 29/89 - 0 529 26/36/ 0 529 40/46/86/90 - 0 530 06/07/10/11/45/46/47/50/51/56/57/60/61/75/76/77/80 0 530 81/85/86/87/90/91 - 0 538 89 - 0 593 26/27/36/37/46/47/76/86/87 0 594 27/28/29/37/38/47/48/49/77/78 - 0 538 87/88 - 0 595 02/03/12/13/22/23/32 0 595 33/42/43/44/45 - 6 581 01/03/13/31/36 - 6 582 05/15/25

2. RANGE *(continued)*

Straight plugs.

100 to 130 V	16 A	2 P+ E	0 511 55
200 to 250 V	16 A	2 P+ E	0 511 56
		3 P + E	0 511 57
	32 A	2 P + E	0 530 56
		3 P + E	0 530 57
	63 A	2 P+ E	0 593 46
		3 P + E	0 593 47
380 to 415 V	16 A	3 P + E	0 511 60
		3 P + N + E	0 511 61
	32 A	3 P + E	0 530 60
		3 P + N + E	0 530 61
	63 A	3 P + E	0 594 47
		3 P + N + E	0 594 48
	125 A	3 P + E	0 595 22
		3 P + N + E	0 595 23
440 V earth at 3 h	32 A	3 P + E	0 529 46
440 to 460 V earth at 11 h	16 A	3 P + E	6 581 01
	32 A	3 P + E	6 581 03
	63 A	3 P + E	6 582 05
480 V to 500 V	63 A	3 P + E	0 594 49

Angled plugs.

200 to 250 V	16 A	2 P+ E	0 511 06
		3 P + E	0 511 07
	32 A	2 P+ E	0 530 06
380 to 415 V	16 A	3 P + E	0 511 10
		3 P + N + E	0 511 11
	32 A	3 P + E	0 530 10
		3 P + N + E	0 530 11

2. RANGE *(continued)*

Mobile sockets.

100 to 130 V	16 A	2 P+ E	0 511 75
200 to 250 V	16 A	2 P+ E	0 511 76
		3 P + E	0 511 77
	32 A	2 P + E	0 530 76
		3 P + E	0 530 77
	63 A	2 P+ E	0 593 86
		3 P + E	0 593 87
380 to 415 V	16 A	3 P + E	0 511 80
		3 P + N + E	0 511 81
	32 A	3 P + E	0 530 80
		3 P + N + E	0 530 81
	63 A	3 P + E	0 594 87
		3 P + N + E	0 594 88
	125 A	3 P + E	0 595 32
		3 P + N + E	0 595 33
440 V earth at 3 h	32 A	3 P + E	0 529 86
440 to 460 V earth at 11 h	16 A	3 P + E	6 581 11
	32 A	3 P + E	6 581 13
	63 A	3 P + E	6 582 15

Inclined surface appliance inlet.

200 to 250 V	16 A	2 P+ E	0 511 86
	32 A	2 P+ E	0 530 86
380 to 415 V	16 A	3 P + E	0 511 90
		3 P + N + E	0 511 91
	32 A	3 P + E	0 530 90
		3 P + N + E	0 530 91
	125 A	3 P + E	0 595 44
		3 P + N + E	0 595 45
440 V earth at 3 h	32 A	3 P + E	0 529 36

Straight panel appliance inlet.

200 to 250 V	63 A	2 P + E	0 593 76
380 to 415 V	63 A	3 P + E	0 594 77
		3 P + N + E	0 594 78
	125 A	3 P + E	0 595 42
		3 P + N + E	0 595 43

Nb : The straight panel appliance inlets 63 A can be fixed on the box 0 538 89 to obtain a straight surface appliance inlet.

IP 66/67 - 55 IEC pin sockets

Cat. No(s): 0 511 06/07/10/11/25/26/27/30/31/46/47/50/51/55/56/57/60/61 0 511 75/76/77/80/81/85/86/87/90/91 - 0 520 29 - 0 522 29/89 - 0 529 26/36/ 0 529 40/46/86/90 - 0 530 06/07/10/11/45/46/47/50/51/56/57/60/61/75/76/77/80 0 530 81/85/86/87/90/91 - 0 538 89 - 0 593 26/27/36/37/46/47/76/86/87 0 594 27/28/29/37/38/47/48/49/77/78 - 0 538 87/88 - 0 595 02/03/12/13/22/23/32 0 595 33/42/43/44/45 - 6 581 01/03/13/31/36 - 6 582 05/15/25

3. DIMENSIONS

Classic inclined panel mounting sockets
IP 66/67 - 55, LV 16 A

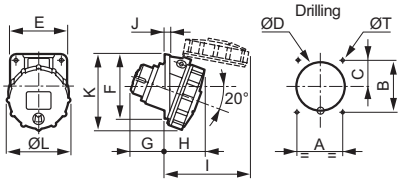

	Weight kg	A	B	C	Ø D	Ø T	E	F	G	H	I	J	K	Ø L
2P+E	0.140	52	60	33	55	4.2	64	72	40	45	91	5.5	87	72.5
3P+E	0.165	60	70	39	63.5	5.2	74	84	41	48	102	5.5	96	81
3P+N+E	0.195	60	70	37	70.6	5.2	80	84	42	50	106	5.5	96	86.5

IP 66/67 - 55, BT 63 A

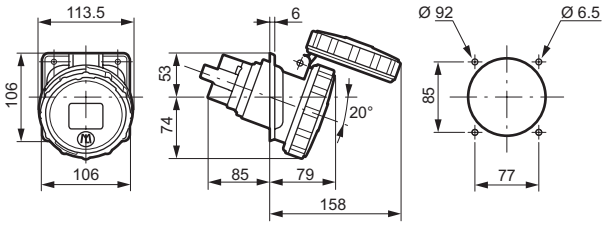

IP 66/67 - 55, BT 125 A

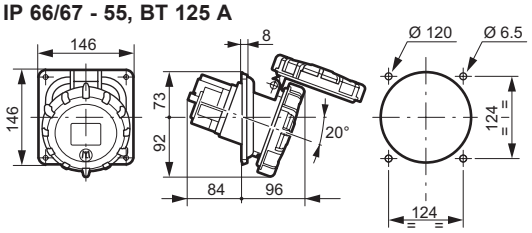

	Weight (kg)
3P+E	1.40
3P+N+E	1.55

Panel mounting sockets with single fixing centres
IP 66/67 - 55, LV 16 and 32 A

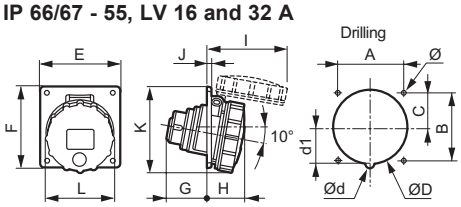

	Weight kg	A	B	C	ØD	Ød	d1	Ø	E	F	G	H	I	J	K	ØL
LV 16 A																
2P+E	0.140	70	70	35	76.2	-	-	4.2	84	84	42	39	83	4.5	90	72.5
3P+E	0.165	70	70	35	76.2	-	-	4.2	84	84	43	41	98	4.5	93	81
3P+N+E	0.195	70	70	35	76.2	-	-	4.2	84	84	43	41	99	4.5	91	86.5
LV 32 A																
2P+E/ 3P+E	0.240	70	70	35	76.2	-	-	4.2	84	94	54	50	113	4.5	101	94.5
3P+N+E	0.270	70	70	35	76.2	8	36	4.2	84	94	54	51	120	4.5	103	101

3. DIMENSIONS *(continued)*

Simple box
Cat. Nos 0 520 29 - 0 522 29

Receive the classic inclined 16 A panel mounting sockets to realise a simple surface mounting socket.
CE on top or bottom face by reversing the box.
Equipped with 2 connected earth terminals.

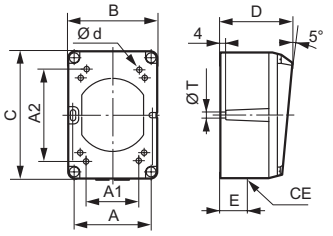

A1 and A2: resealable optional internal fixing points.

	Weight kg	A1	A2	Ød	A	A3	ØT	B	C	D	E	CE
2P+E	0.115	51	68	4,2	64	-	5,3	74	106	58	20	M20
3P+E / 3P+N+E	0.160	68	68	4,2	85	-	5,3	96	122	60	22	M20

Simple box
Cat. No. 0 529 40

Receive the 32 A panel mounting sockets with single fixing centres to realise a simple surface mounting socket.
CE on top or bottom face by reversing the box.
Equipped with 2 connected earth terminals.

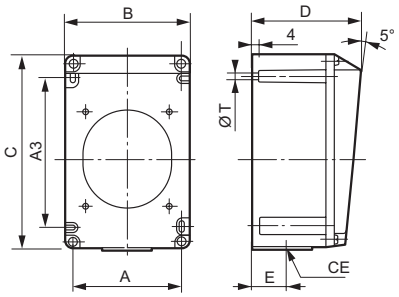

	Weight kg	A1	A2	Ød	A	A3	ØT	B	C	D	E	CE
2P+E / 3P+E / 3P+N+E	0.340	-	-	-	90	125	5,3	102	162	90	26	M25

IP 66/67 - 55 IEC pin sockets

Cat. No(s): 0 511 06/07/10/11/25/26/27/30/31/46/47/50/51/55/56/57/60/61 0 511 75/76/77/80/81/85/86/87/90/91 - 0 520 29 - 0 522 29/89 - 0 529 26/36/ 0 529 40/46/86/90 - 0 530 06/07/10/11/45/46/47/50/51/56/57/60/61/75/76/77/80 0 530 81/85/86/87/90/91 - 0 538 89 - 0 593 26/27/36/37/46/47/76/86/87 0 594 27/28/29/37/38/47/48/49/77/78 - 0 538 87/88 - 0 595 02/03/12/13/22/23/32 0 595 33/42/43/44/45 - 6 581 01/03/13/31/36 - 6 582 05/15/25

3. DIMENSIONS *(continued)*

Through wiring box.
Cat. Nos. 0 520 89 - 0 522 89 - 0 529 90 - 0 538 89

Receive the panel mounting sockets to realise the surface mounting sockets:

- Cat. No. 0 52089 receive the classic inclined panel mounting sockets 16 A, 2P+E.
- Cat. No. 0 522 89 receive the classic inclined panel mounting sockets 16 A, 3P+E / 3P+N+E.
- Cat. No. 0 529 90 receive the 32 A panel mounting sockets with single fixing centres 2P+E / 3P+E / 3P+N+E.
- Cat. No. 0 538 89 receive the inclined 63 A panel mounting sockets and straight 63 A panel appliance inlets 2P+E / 3P+E / 3P+N+E.

CE on top or bottom face by reversing the box.
Equipped with:
- 2 connected earth terminals in 16 and 32 A.
- 3 connected earth terminal in 63 A.

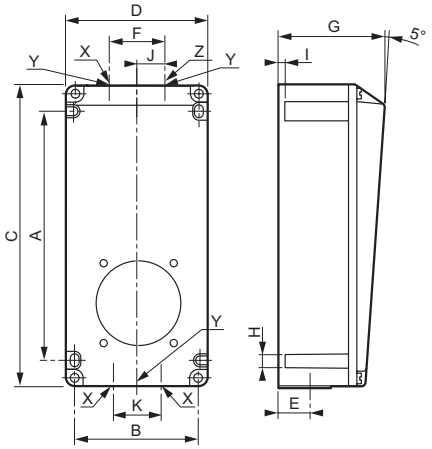

	Weight (kg)	A	B	H	C	D	E	F	G	I	J	K	X	Y	Z
16 A															
2P+E	0.330	145	74	5,3	182	86	22	34	75	4	-	-	-	M20	-
3P+E / 3P+N+E	0.440	175	88	5.3	212	100	22	40	77	4	-	-	-	M20	-
32 A															
2P+E/ 3P+E / 3P+N+E	0.670	234	117	5.3	270	130	30	50	120	4	-	-	-	M25	-
63 A															
2P+E/ 3P+E / 3P+N+E	2.000	260	152	6.3	300	170	40	-	150	8	50	70	M32	-	M20

3. DIMENSIONS *(continued)*

Surface mounting socket
IP 66/67 - 55, LV 63 A

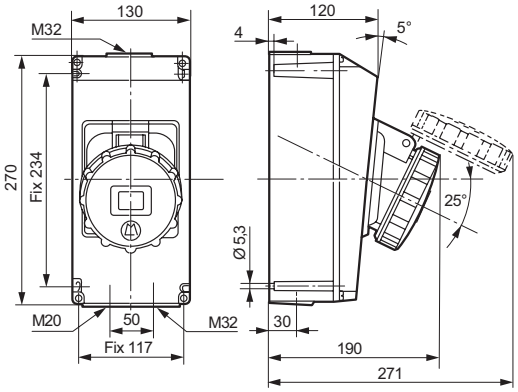

	Weight (kg)
2P+E	**1.6**
3P+E	**1.65**
3P+N+E	**1.7**

IP 66/67 - 55, LV 125 A

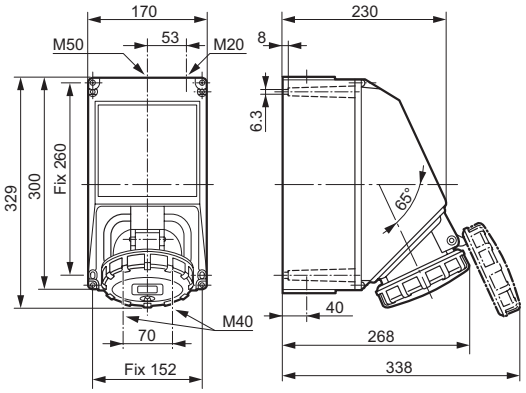

	Weight (kg)
3P+E	**3.5**
3P+N+E	**3.7**

Straight plugs
IP 66/67 - 55, LV 16 and 32 A

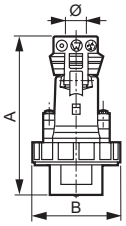

	Weight (kg)	A	B	Clamping/ Grip Ø
16 A				
2P+E	0.165	135	72.5	8 to 15
3P+E	0.195	139	81	8 to 15
3P+N+E	0.220	154	86.5	10 to 18
32 A				
2P+E	0.280	164	94.5	10 to 18
3P+E	0.280	164	94.5	12 to 22
3P+N+E	0.325	170	101	12 to 22

IP 66/67 - 55 IEC pin sockets

Cat. No(s): 0 511 06/07/10/11/25/26/27/30/31/46/47/50/51/55/56/57/60/61 0 511 75/76/77/80/81/85/86/87/90/91 - 0 520 29 - 0 522 29/89 - 0 529 26/36/ 0 529 40/46/86/90 - 0 530 06/07/10/11/45/46/47/50/51/56/57/60/61/75/76/77/80 0 530 81/85/86/87/90/91 - 0 538 89 - 0 593 26/27/36/37/46/47/76/86/87 0 594 27/28/29/37/38/47/48/49/77/78 - 0 538 87/88 - 0 595 02/03/12/13/22/23/32 0 595 33/42/43/44/45 - 6 581 01/03/13/31/36 - 6 582 05/15/25

3. DIMENSIONS *(continued)*

Straight plug
IP 66/67 - 55, LV 63 A

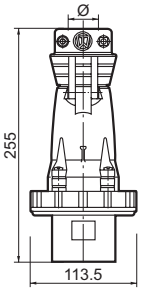

	Weight (kg)	Clamping/grip Ø
63 A		
2P+E	0.620	16 to 26
3P+E	0.680	18.5 to 29
3P+N+E	0.750	20.5 to 32

IP 66/67 - 55, LV 125 A

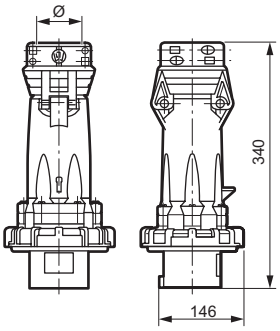

	Weight (kg)	Clamping/grip Ø
3P+E	1.54	24 to 48
3P+N+E	1.70	28 to 48

Angled plugs
IP 66/67 - 55, LV 16 and 32 A

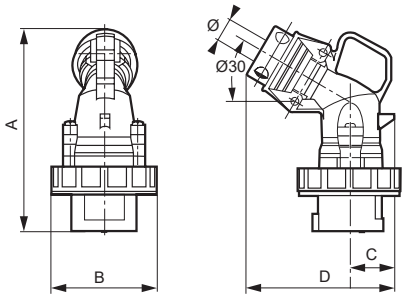

	Weight (kg)	A	B	C	D	Clamping/grip Ø
16 A						
2P+E	0.165	136	72.5	29.5	100	8 to 15
3P+E	0.195	141	81	33.5	105	8 to 15
3P+N+E	0.220	150	86.5	37.5	114	10 to 18
32 A						
2P+E	0.280	161	94.5	39.5	116	10 to 18
3P+E	0.280	161	94.5	39.5	116	12 to 22
3P+N+E	0.325	167	101	44.5	122	12 to 22

3. DIMENSIONS *(continued)*

Mobile sockets
IP 66/67 - 55, LV 16 and 32 A

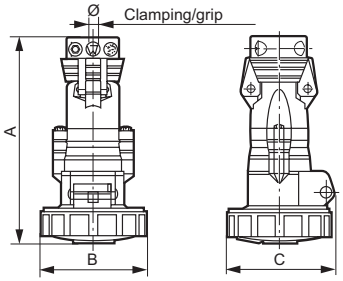

	Weight (kg)	A	B	C	Clamping/grip Ø
16 A					
2P+E	0.180	150	72.5	75.5	8 to 15
3P+E	0.215	154	81	86	8 to 15
3P+N+E	0.275	189	86.5	89	10 to 18
32 A					
2P+E	0.320	179	94.5	99	10 to 18
3P+E	0.320	179	94.5	99	12 to 22
3P+N+E	0.375	185	101	106	12 to 22

IP 66/67 - 55, LV 63 A

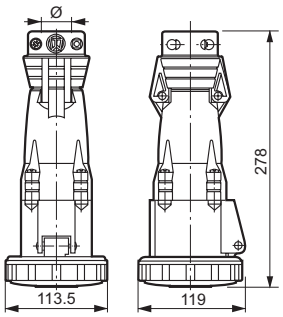

	Weight (kg)	Clamping/grip Ø
2P+E	0.780	16 to 26
3P+E	0.850	18.5 to 29
3P+N+E	0.910	20.5 to 32

IP 66/67 - 55, LV 125 A

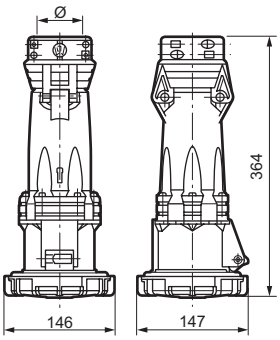

	Weight (kg)	Clamping/grip Ø
3P+E	1.8	24 to 48
3P+N+E	2	28 to 48

IP 66/67 - 55 IEC pin sockets

Cat. No(s): 0 511 06/07/10/11/25/26/27/30/31/46/47/50/51/55/56/57/60/61 0 511 75/76/77/80/81/85/86/87/90/91 - 0 520 29 - 0 522 29/89 - 0 529 26/36/ 0 529 40/46/86/90 - 0 530 06/07/10/11/45/46/47/50/51/56/57/60/61/75/76/77/80 0 530 81/85/86/87/90/91 - 0 538 89 - 0 593 26/27/36/37/46/47/76/86/87 0 594 27/28/29/37/38/47/48/49/77/78 - 0 538 87/88 - 0 595 02/03/12/13/22/23/32 0 595 33/42/43/44/45 - 6 581 01/03/13/31/36 - 6 582 05/15/25

3. DIMENSIONS *(continued)*

Inclined surface appliance inlet
IP 66/67 - 55, LV 16 and 32 A

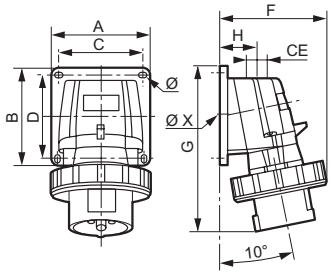

	Weight (kg)	A/B	C/D	F	G	H	CE	Ø	ØX
16 A									
2P+E	0.188	84	72	87	126	34	M20	4.3	17
3P+E	0.257	84	72	95	134	34			
3P+N+E	0.297	84	72	100	141	34			
32 A									
2P+E	0.370	110	98	107	168	39	M25	5.3	24
3P+E									
3P+N+E	0.413	110	98	113	168	39			

IP 66/67 - 55, LV 125 A

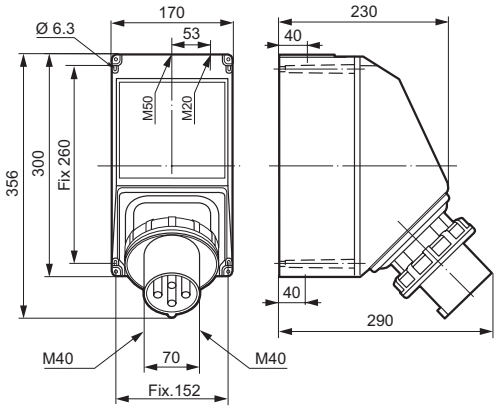

	Weight (kg)
3P+E	2.6
3P+N+E	2.7

Straight panel appliance inlet
IP 66/67 - 55, LV 63 A

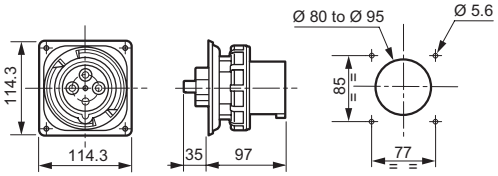

	Weight (kg)
2P+E	0.490
3P+E	0.548
3P+N+E	0.610

Nb : Can be fixed on the box Cat. No. 0 538 89 to obtain a straight surface appliance inlet.

IP 66/67 - 55, LV 125 A

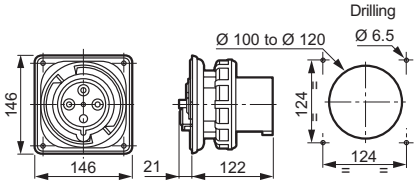

	Weight (kg)
3P+E	1
3P+N+E	1.15

4. TECHNICAL CHARACTERISTICS

4.1 Resistance to severe environment

Resistance to temperature variations using spray jets: tests carried out on the same day using three temperature intervals from 5 to 60°C/Spray jet 3 to 4 bars at 20 cm from the nazzle.

Resistance to industrial cleaning procedures generally carried out in the agri-food sector: high-pressure pre-wash/detergent cleaning/ high pressure - high temperature wash.

- **Pre-wash degreasing test:** test carried out using a high-pressure machine set between 70 and 90 bars.
  Includes hot water between 70 and 80°C.
  Spraying at a distance of 50 cm for one minute without directly applying on the test product.
- **Detergent cleaning:** two detergents are used: Galorox acid and Galorox 3 %.
  Each detergent is applied by spraying it around the product for 10 seconds.
  The detergent is then left to take effect for 30 minutes.
- **Wash:** high-pressure machine set between 110 and 120 bars.
  hot water between 70 and 80°C is sprayed.
  The othe settings are identical to those in the pre-wash degreasing test.

Result: all the tested products successfully passed the detergent tests based on the above-specified conditions.

4.2 Glow wire resistance

- 850°C active parts
- 650°C housing.

4.3 Dielectric strengh

3000 V - 50 Hz

4.4 Temperature of use

- 50°C to + 100°C if and only if the products have been previously wired above - 20°C. Any mechanical constraints below - 25°C has to be done.
- Radiation intensity: 550 W/m^2
- Test duration: 168 hours.
- Infrared and ultra-violet filter in order to get as close to the solar spectrum as possible.

4.6 Ageing test

Thermoplastic material:
Ageing 7 days at 80°C.

Flap spring strengh:
5000 opening/closing.

Seals strength:
Tested ageing at 70°C during 10 days.

IP 66/67 - 55 IEC pin sockets

Cat. No(s): 0 511 06/07/10/11/25/26/27/30/31/46/47/50/51/55/56/57/60/61 0 511 75/76/77/80/81/85/86/87/90/91 - 0 520 29 - 0 522 29/89 - 0 529 26/36/ 0 529 40/46/86/90 - 0 530 06/07/10/11/45/46/47/50/51/56/57/60/61/75/76/77/80 0 530 81/85/86/87/90/91 - 0 538 89 - 0 593 26/27/36/37/46/47/76/86/87 0 594 27/28/29/37/38/47/48/49/77/78 - 0 538 87/88 - 0 595 02/03/12/13/22/23/32 0 595 33/42/43/44/45 - 6 581 01/03/13/31/36 - 6 582 05/15/25

5. WIRING

5.1 Tested wiring according IEC 60 309.1

Type	Intensity	Conductors size (mm ≤)	Conductor types
Surface panel mounting sockets	16 A	1.5 to 4	Rigid
	32 A	2.5 to 10	Rigid
	63 A	6 to 25	Rigid
	125 A	25 to 70	Rigid
Appliance inlets	16 A	1 to 2.5	Rigid
	32 A	2.5 to 6	Rigid
	63 A	6 to 16	Rigid
	125 A	16 to 50	Rigid
Plugs and mobile sockets	16 A	1 to 2.5	Flexible
	32 A	2.5 to 6	Flexible
	63 A	6 to 16	Flexible
	125 A	16 to 50	Flexible

Pilot cabling

	63 A / 125 A	Conductor types
Surface and panel mounting sockets	2.5 to 10	rigid
Appliance inlets	2.5 to 6	rigid
Plugs and mobile sockets	2.5 to 6	flexible with ferrule

5.2 Tightening torque of the connection screws

- 16 A LV: from 0.7 to 1 Nm
- 32 A LV: from 0.7 to 1 Nm
- 63 A LV: from 2 to 2.2 Nm for Phase and Earth from 0.7 to 1 Nm for pilot.
- 125 A LV: from 3 to 4 Nm for Phase and Earth from 0.7 to 1 Nm for pilot.

6. USE

NEW HYPRA 66/67 - 55 - WATERTIGHT, EVEN WHEN UNLOCKED(1)

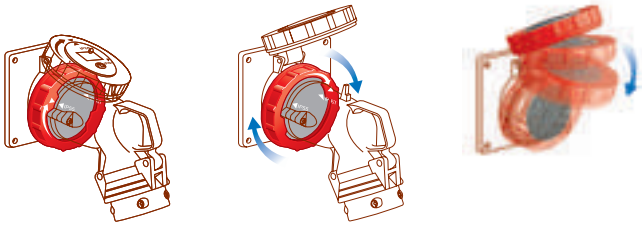

IP 55 connected guaranteed with flap closed on the plug.	IP 66/67 connected with the ring locked.	Unconnected, IP 55 guarantee when flap is closed. IP 66/67 with the ring locked.

(1)With a couple of IP 66/67-55 products

6. USE *(continued)*

Using of the 32 A, IP 66/67 - 55 panel mounting sockets with single fixing centres

6.1 Maintenance on enclosure

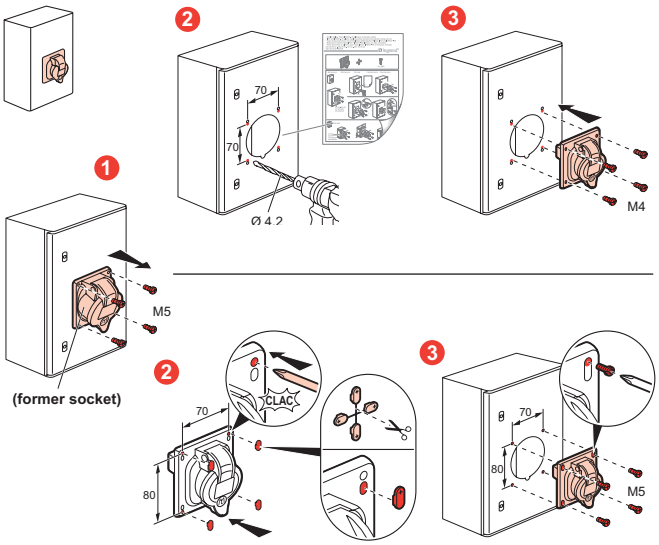

6.2 Maintenance on box

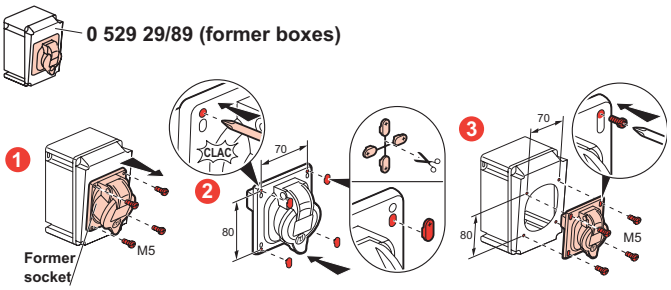

6.3 New installation

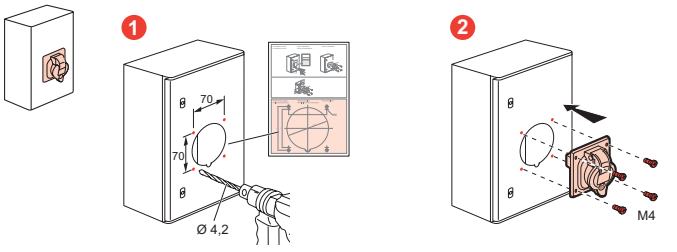

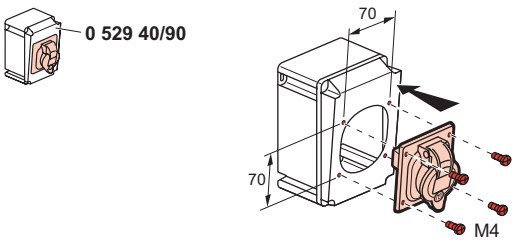

IP 66/67 - 55 IEC pin sockets

Cat. No(s): 0 511 06/07/10/11/25/26/27/30/31/46/47/50/51/55/56/57/60/61 0 511 75/76/77/80/81/85/86/87/90/91 - 0 520 29 - 0 522 29/89 - 0 529 26/36/ 0 529 40/46/86/90 - 0 530 06/07/10/11/45/46/47/50/51/56/57/60/61/75/76/77/80 0 530 81/85/86/87/90/91 - 0 538 89 - 0 593 26/27/36/37/46/47/76/86/87 0 594 27/28/29/37/38/47/48/49/77/78 - 0 538 87/88 - 0 595 02/03/12/13/22/23/32 0 595 33/42/43/44/45 - 6 581 01/03/13/31/36 - 6 582 05/15/25

7. WIRING DIAGRAM

Breaking via guide wire:

The guide wire is a control conductor used with the power conductor. If it is interrupted, it causes the breaking of the power circuit via a contactor. This arrangement provides an electrical solution to the requirement for breaking circuits greater than 32A (decree dated 14/11/88). An additional (shorter) pin is therefore added to the various models of sockets to perform this “guide wire” function.
The “guide wire” solution nonetheless remains restricting in terms of both its implementation (requirement for special cables) and its cost (power contactor).

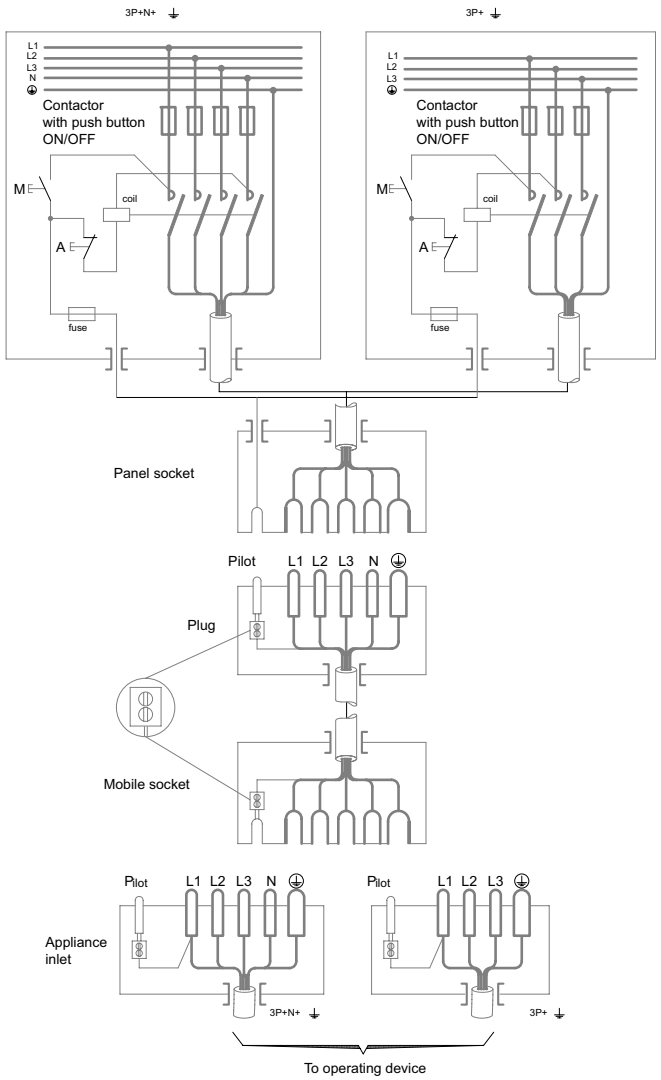

8. STANDARDS AND DECREE

- IEC 60309-1 and NF EN 60309-1 (design rules)
- IEC 60309-2 and NF EN 60309-2 (dimension rules)
- IEC 600 529 and NF EN 600 529 (IP)
- IEC 62262 and NF EN 62262 (IK)
- Decree of 14/11/88 (workers safety)