E11994

Mounting clamp for position sensors

MOUNTING CLAMP M12

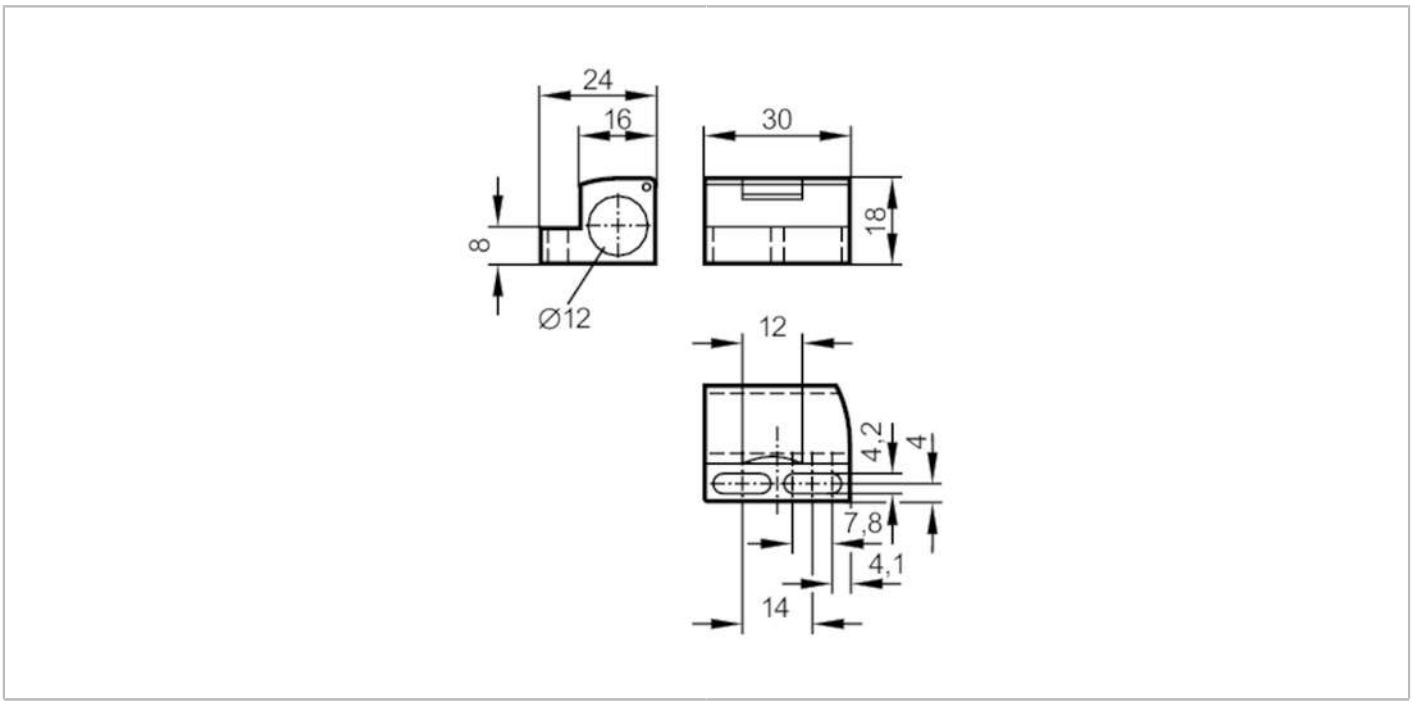

CE

Application		
Design		with end stop
Installation		for sensors with 45° chamfer
Operating conditions		
Ambient temperature	[°C]	-25...85
Mechanical data		
Weight	[g]	9.2
Dimensions	[mm]	18 x 30 x 24
Inside diameter	[mm]	12
Materials		PC
Remarks		
Pack quantity		1 pcs.