Standard Dimensions:x

The following are standard dimensions unless otherwise stated.

All dimensions subject to commercial tolerance.

- Hole Size: 14mm diameter
- Hole Spacing (From End): 20mm from end of fitting
- Hole spacing (On Center): 48mm center to center
- Fitting Width: 40mm

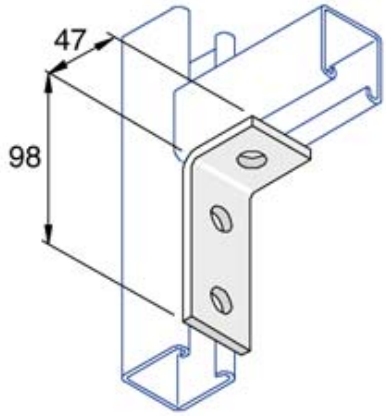

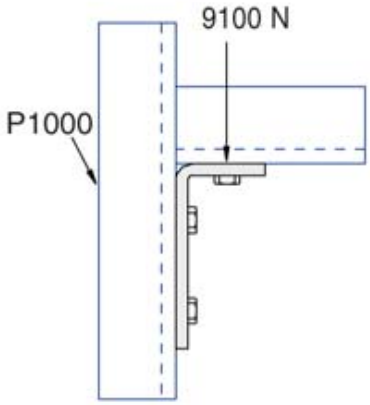

Part No.	Finish	Weight	Box Qty
P1346	HG	0.23	25
P1346	SS	0.20	25

Project: A

Architect / Engineer: B

Date: C **Phone:** D

Contractor: E

Address: F

Notes 1: G

Approval Stamp: