SSA-EB Series Lighted Emergency Stop Push Buttons

Datasheet

Illuminated 30 mm mount electro-mechanical push buttons

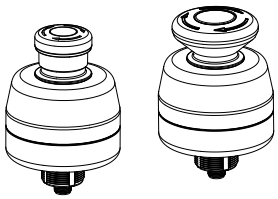

- Rugged design; easy installation with no assembly or individual wiring required
- Push-to-stop, twist-to-release, or pull-to-release operation per IEC60947-5-5
- Latching design complies with ISO 13850; direct (positive) opening operation per IEC 60947-5-1
- Compliant with ANSI B11.19, ANSI NFPA79, and IEC/EN 60204-1 Emergency Stop requirements
- “Safe Break Action” ensures N.C. contacts will open if the contact block is separated from the actuator
- 8-pin M12/Euro-style Quick Disconnect
- Models with YELLOW and RED indication of actuation (armed or depressed/ latched button)
- "Emergency Stop" legend included
- U.S. Patent No. Des. 700,149

Models SSA-EB... series are "mushroom-style" electro-mechanical emergency stop push buttons. When the button is armed, the switch's safety contacts (N.C.) are closed and its monitoring contacts (N.O.), if present, are open. When the button is pushed, the switch's safety contacts open and the monitoring contacts close. The contacts remain in this condition until the push button is manually rearmed by pulling or twisting clockwise the red push button actuator.

The SSA-EB1(2)P..-..ECQ.. series has a 30 mm mounting base similar to Banner’s OTB, VTB, and STB Optical Touch Buttons for ease of mounting without requiring an additional enclosure. The EZ-LIGHT® illumination logic allows for easy identification of a pushed/actuated button. An armed button is either a steady yellow illumination or OFF, a pushed/ actuated button is indicated by a red flashing illumination. An optional input allows an armed button to illuminate a steady red to indicate a machine stop or emergency stop condition.

Models

Model	Push Button	EZ-LIGHT® Illumination Logic	Connection
SSA-EB1PL-12ECQ8	Standard 40 mm	OFF (armed), RED (solid, PUSH)	8-pin M12 QD
SSA-EB1PLXR-12ECQ8		OFF (armed), RED (flash, PUSH)	
SSA-EB1PLYR-12ECQ8		YELLOW (armed), RED (flash, PUSH)	
SSA-EB1PLGR-12ECQ8		GREEN (armed), RED (flash, PUSH)	
SSA-EB2PLXR-12ECQ8	Large 60 mm	OFF (armed), RED (solid, PUSH)	

Important... Read this before proceeding!

The user is responsible for satisfying all local, state, and national laws, rules, codes, and regulations relating to the use of this product and its application. Banner Engineering Corp. has made every effort to provide complete application, installation, operation, and maintenance instructions. Please contact a Banner Applications Engineer with any questions regarding this product.

The user is responsible for making sure that all machine operators, maintenance personnel, electricians, and supervisors are thoroughly familiar with and understand all instructions regarding the installation, maintenance, and use of this product, and with the machinery it controls. The user and any personnel involved with the installation and use of this product must be thoroughly familiar with all applicable standards, some of which are listed within the specifications. Banner Engineering Corp. makes no claim regarding a specific recommendation of any organization, the accuracy or effectiveness of any information provided, or the appropriateness of the provided information for a specific application.

WARNING: Not a Safeguarding Device

An Emergency Stop Device is not considered a safeguarding device because it requires an overt action by an individual to stop machine motion or hazards.

A safeguarding device limits or eliminates an individual's exposure to a hazard *without action by the individual or others.* Because an individual must actuate the device for it to function, these devices do not fit the definition of a safeguarding device and cannot be substituted for required safeguarding. Refer to the relevant standards to determine those requirements.

Emergency Stop Considerations

ANSI NFPA 79, ANSI B11.19, IEC/EN 60204-1, and ISO 13850 specify emergency stop requirements, including the following:

- Emergency-stop push buttons shall be located at each operator control station and at other operating stations where emergency shutdown is required.
- Stop and emergency-stop push buttons shall be continuously operable and readily accessible from all control and operating stations where located. Do not mute or bypass E-stop buttons.
- Actuators of emergency-stop devices shall be colored red. The background immediately around the device actuator shall be colored yellow (where possible). The actuator of a push-button-operated device shall be of the palm or mushroom-head type.
- The emergency-stop actuator shall be a self-latching type.

WARNING: Emergency Stop Functions

Do not mute or bypass any Emergency Stop device. ANSI B11.19, ANSI NFPA79 and IEC/EN 60204-1 require that the Emergency Stop function remain active at all times.

WARNING: Multiple Switching Devices

Whenever two or more devices are connected to the same safety module (controller):

- Contacts of the corresponding pole of each switch must be connected together in series. *Never connect the contacts of multiple switches in parallel.* Such a parallel connection defeats the switch contact monitoring ability of the Module and creates an unsafe condition which may result in serious injury or death.
- Each device must be individually actuated (engaged), then released (or re-armed) and the safety module reset. This allows the module to check each switch and its wiring to detect faults.

This check must be performed during the prescribed checkouts. Failure to test each device individually in this manner may result in undetected faults and create an unsafe condition which may result in serious injury or death.

Installation and Maintenance

The device must not be affected by environmental conditions. Install the device so that operation is not impeded, but should be protected against inadvertent operation (for example, accidental actuation by being bumped or leaned against). Do not operate the switch using a tool. Do not expose the switch to excessive shocks and vibrations, otherwise the switch may be deformed or damaged, causing malfunction or operation failure. Hardware includes jam nut, lock washer, lock ring, and seal washer. The lock ring may be used to prevent switch rotation if a 5mm hole keyway is provided.

Electrical installation must be made by qualified personnel[1] and must comply with NEC (National Electrical Code), ANSI/ NFPA 79 or IEC/EN 60204-1, and all applicable local standards. It is not possible to give exact wiring instructions for a device that interfaces to a multitude of machine control configurations. The following is general in nature; it is recommended to perform a risk assessment to ensure appropriate application, interfacing/hookup, and risk reduction (see ISO 12100 or ANSI B11.0).

[1] A Qualified Person possesses a recognized degree or certificate or has extensive knowledge, training, and experience to solve problems relating to the emergency stop installation.

WARNING: Shock Hazard and Hazardous Energy

Always disconnect power from the safety system (for example, device, module, interfacing, etc.) and the machine being controlled before making any connections or replacing any component.

Electrical installation and wiring must be made by Qualified Personnel and must comply with the relevant electrical standards and wiring codes, such as the NEC (National Electrical Code), ANSI NFPA79, or IEC 60204-1, and all applicable local standards and codes.

Lockout/tagout procedures may be required. Refer to OSHA 29CFR1910.147, ANSI Z244-1, ISO 14118, or the appropriate standard for controlling hazardous energy.

Table 1: Hookup

Pin	Color	Function	Connection and Pinout
1	White	AUX N.O. Output (Switched pin 2)	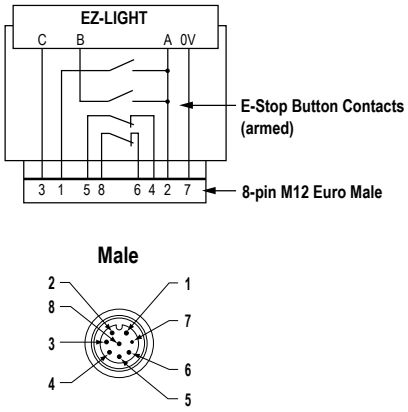
2	Brown	+24V dc (12 - 30V dc)	
3	Green	Stop Signal input from safety module or machine +24V dc (12-30V dc)	
4	Yellow	CH2a	
5	Gray	CH2b	
6	Pink	CH1a	
7	Blue	0V dc	
8	Red	CH1b	

Table 2: SSA-EB1xxLYR-xx or SSA-EB1xxLGR-xx

See *Figure 1* on page 4.

Situation	Indication	Illumination Logic
Button Armed Pin 3 open	YELLOW / SOLID or GREEN / SOLID	• Indicates button is armed • If used, ES-FA-11AA Module status is in a RESET/RUN condition (31/32 open)
Button Pushed Pin 3 open or +Vdc	RED / FLASH	• Indicates the button is pushed (actuated) • Signal on Pin 3 has no effect on a button that has been pushed (actuated)
Button Armed Pin 3 = +Vdc	RED / SOLID	• Indicates the machine is in an Emergency Stop or other stop condition, but that specific button has not been pushed (actuated) • This optional signal (12 to 30Vdc) allows the user to indicate a stop condition by turning the armed indication to RED (steady) indication

Table 3: SSA-EB1(2)xxLXR-xx

See *Figure 1* on page 4.

Situation	Indication	Illumination Logic
Button Armed Pin 3 open	OFF	• Indicates button is armed • If used, ES-FA-11AA Module status is in a RESET/RUN condition (31/32 open)
Button Pushed Pin 3 open or +Vdc	RED / FLASH	• Indicates the button is pushed (actuated) • Signal on Pin 3 has no effect on a button that has been pushed (actuated)

Situation	Indication	Illumination Logic
Button Armed Pin 3 = +Vdc	RED / SOLID	• Indicates the machine is in an Emergency Stop or other stop condition, but that specific button has not been pushed (actuated) • This optional signal (12 to 30Vdc) allows the user to indicate a stop condition by turning the armed indication to RED (steady) indication

Table 4: SSA-EB1xxL-xx

See *Figure 1* on page 4.

Situation	Indication	Illumination Logic
Button Armed Pin 3 open	OFF	• Indicates button is armed • If used, ES-FA-11AA Module status is in a RESET/RUN condition (31/32 open)
Button Pushed Pin 3 open or +Vdc	RED / SOLID	• Indicates the button is pushed (actuated) • Signal on Pin 3 has no effect on a button that has been pushed (actuated)
Button Armed Pin 3 = +Vdc	RED / SOLID	• Indicates the machine is in an Emergency Stop or other stop condition, but that specific button has not been pushed (actuated) • This optional signal (12 to 30Vdc) allows the user to indicate a stop condition by turning the armed indication to RED (steady) indication

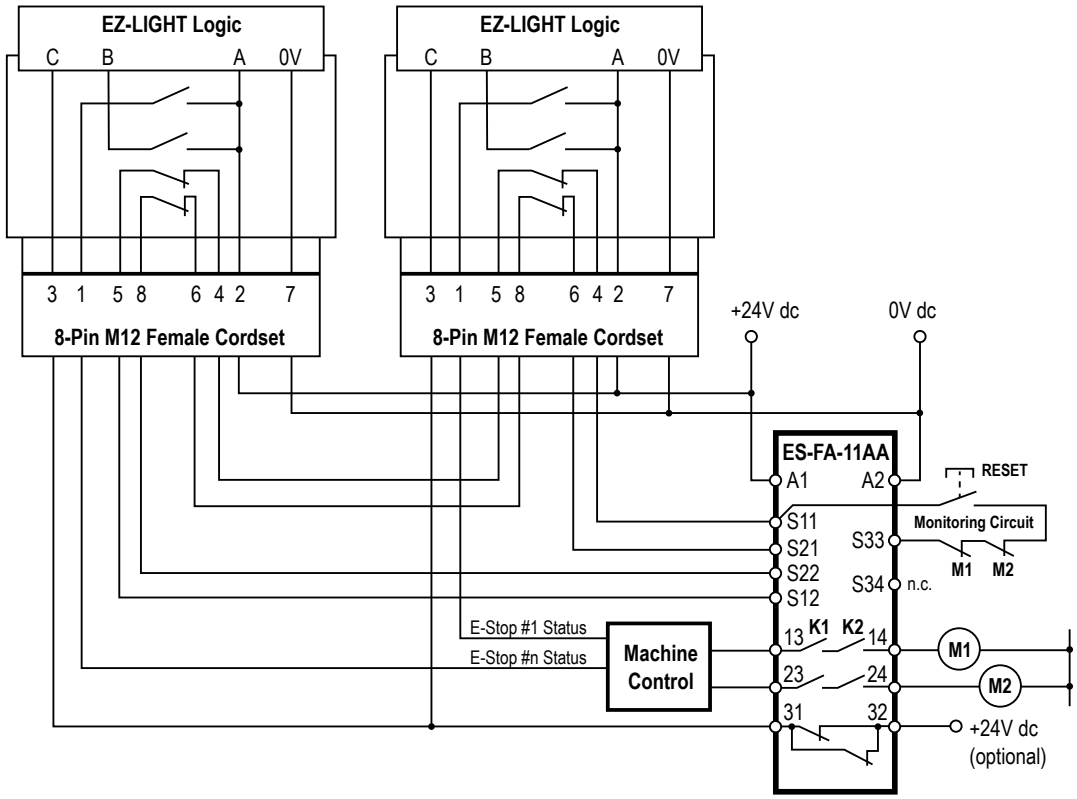

Figure 1. Illuminated models - example hookup

NOTE: Refer to the ES-FA-11AA E-Stop Safety Module datasheet (p/n 60606) for complete safety module installation information.

Checkout

At machine set up, a *Designated Person*[2] should test each emergency stop push button for proper machine shutdown response. A *Designated Person* should check the emergency stop buttons for proper operation, physical damage, button looseness, and excessive environmental contamination. This should take place on a periodic schedule determined by the user, based on the severity of the operating environment and the frequency of switch actuations. Adjust, repair, or replace components as needed. If inspection reveals contamination on the switch, thoroughly clean the switch and eliminate the cause of the contamination. Replace the switch and/or appropriate components when any parts or assemblies are damaged, broken, deformed, or badly worn; or if the electrical/mechanical specifications (for the environment and operating conditions) have been exceeded. Always test the control system for proper functioning under machine control conditions after performing maintenance, replacing the emergency stop device, or replacing any component of the device.

Specifications

Housing / Button
Polycarbonate / Polyamide
Threaded base has M30 x 1.5 external threads; Max. Tightening Torque: 4.5 N·m (40 in·lbf)

Operating Conditions
Temperature: –25 °C to +55 °C (–13 °F to +131 °F)
Humidity: 45% to 85% RH (no condensation)

Environmental Rating
IP65 (IEC60529)

Insulation Resistance
100MΩ minimum (500 V dc megger)

Impulse Withstand Voltage
2.5 kV

Pollution Degree
3

Output Configuration
See *Installation and Maintenance* on page 2

Overvoltage Category
II

Contact Material/Bounce[3]
Gold plated silver / 20 ms

Electrical Life
100,000 operations minimum, 250,000 operations minimum at 24 V AC/DC, 100 mA

Mechanical Life
250,000 operations

Shock Resistance
Operating extremes: 150 m/s^2 (15G)

Vibration Resistance
Operating extremes: 10 to 500Hz, amplitude 0.35 mm acceleration 50 m/s^2

LED Color
Yellow - 590 nm, Red - 618 nm

LED Flash Rate
1.6 Hz at 50% duty cycle

LED Voltage/Current
SSA-EB1..LYR-.., SSA-EB1(2)..LXR-.., and SSA-EB1.. L-..: 12 to 30 V dc; 120 mA at 12 V dc, 65 mA at 24 V dc, 60 mA at 30 V dc
SSA-EB1..LGR-..: 12 to 30 V dc; 135 mA at 12 V dc, 75 mA at 24 V dc, 70 mA at 30 V dc

Electrical Rating
Minimum load: 1 mA at 5 V ac/dc
SSA-EB1(2)xx-xxECQ8: 2A at 60 V ac / 75 V dc maximum
UL Applications: 1.5 A at 250 V ac, 1 A at 30 V dc (pilot duty)
CE Applications: AC-15: 1.5 A at 250 V ac, DC-13: 1 A at 30 V dc

Rated Insulation Voltage (Ui)
60 V ac / 75 V dc

Rated Current (Ith)
2A

B10d
100,000 (based on ISO13849-1(2006))

Design and Application Standards
Compliant with EN/IEC 60497-1 / -5-1, ISO 13850, ANSI B11.19 , ANSI NFPA79, IEC 60204-1

Date code format (U.S. Standard Format)
YYWWX: 2-digit year, 2-digit week, "X" internal code

Certifications

CE c UL US LISTED

[2] A *Designated Person* is identified in writing by the employer as being appropriately trained to perform a specified checkout procedure. A Qualified Person possesses a recognized degree or certificate or has extensive knowledge, training, and experience to solve problems relating to the emergency stop installation.

[3] When the button is reset, the normally closed contacts will chatter. When pressing the button, the normally open contacts will chatter. When designing a control circuit, take the contact chatter time into consideration. Do not expose the switch to external shocks, otherwise the contacts will bounce.

Rated Operating Current and Voltage (Ue)

Safety Contact (N.C.)		30 V	60 V ac/75 V dc
AC 50/60 Hz	Resistive Load (AC-12)	-	2 A
	Inductive Load (AC-15)	-	2 A
DC	Resistive Load (DC-12)	2 A	0.4 A
	Inductive Load (DC-13)	1 A	0.22 A

Auxiliary Output (N.O.)		30 V	60 V ac/75 V dc
12 to 30V dc (from supply pin 2)	Resistive Load (DC-12)	0.25 A	n.a.
	Inductive Load (DC-13)	0.25 A	n.a.

The operating current is classified according to JIS C 8201-5-1-1999 making and breaking capacities and are measured at resistive/inductive load types specified in IEC 60947-5-1. See "Electrical Rating" above for specific model and UL/CE maximum ratings.

Dimensions

All measurements are listed in millimeters (inches), unless noted otherwise.

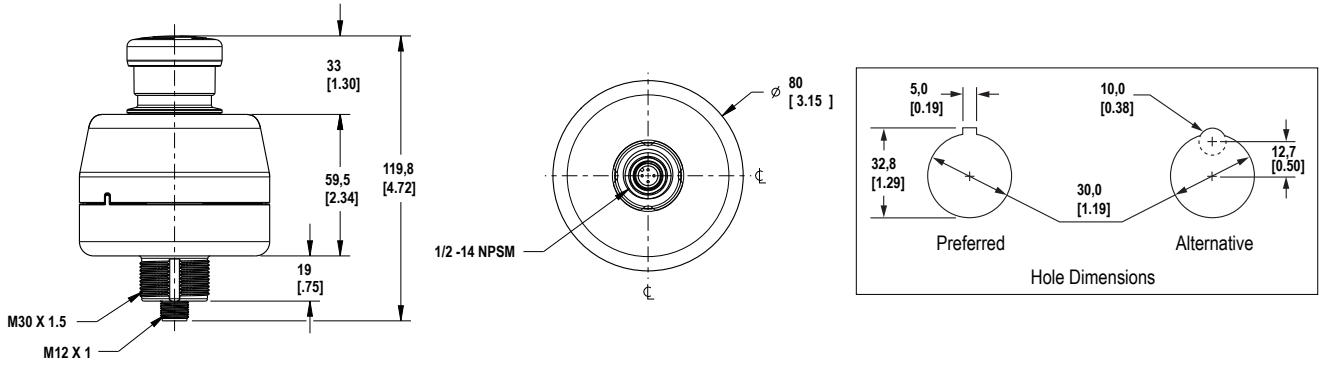

Figure 2. Standard 40 mm Pushbutton

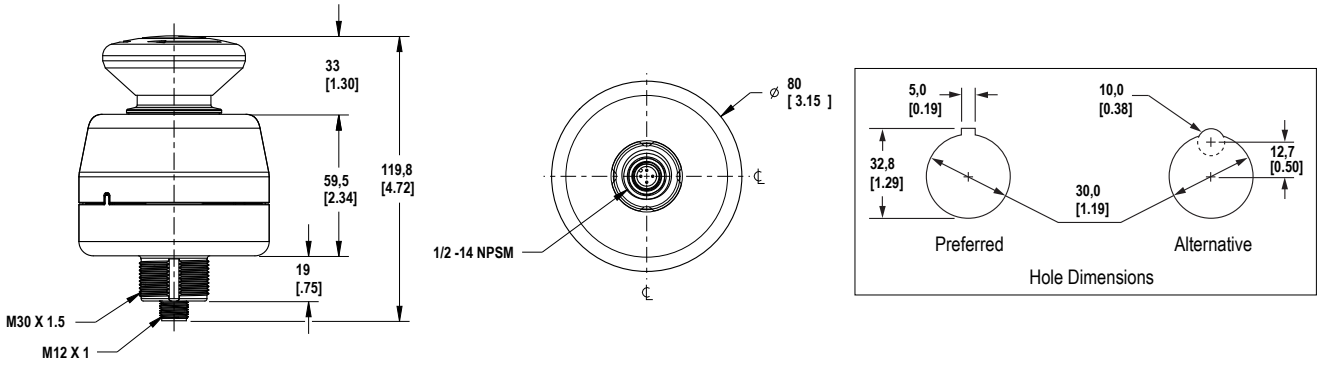

Figure 3. Large 60 mm Pushbutton

Accessories

Mounting Brackets

SSA-MBK-EEC1
- Single 30 mm hole
- 8 gauge steel, black finish (zinc-plated)
- Front surface for customer applied labels

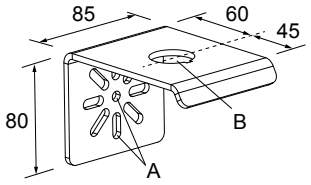

SSA-MBK-EEC2
- Two 30 mm holes
- 8 gauge steel, black finish (zinc-plated)
- Front surface for customer applied labels

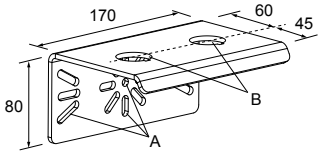

SSA-MBK-EEC3
- Three 30 mm holes
- 8 gauge steel, black finish (zinc-plated)
- Front surface for customer applied labels

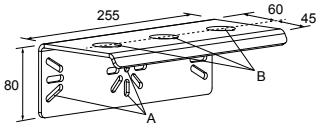

The SSA-MBK-EECx brackets offer:
- Horizontal and vertical (post) mounting
- Interchangeable positions of mounted devices (e.g. OTB/STB/VTB, E-Stop, K50s)

Hole size: A = ø 7 , B = ø 30

Cordsets

8-Pin Threaded M12/Euro-Style Cordsets with Open-Shield				
Model	Length	Style	Dimensions	Pinout (Female)
MQDC2S-806	1.83 m (6 ft)	Straight	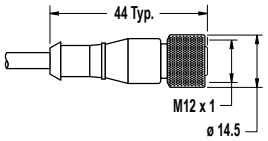	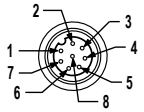 1 = White, 2 = Brown, 3 = Green, 4 = Yellow, 5 = Gray, 6 = Pink, 7 = Blue, 8 = Red
MQDC2S-815	4.57 m (15 ft)			
MQDC2S-830	9.14 m (30 ft)			
MQDC2S-850	15.2 m (50 ft)			

8-Pin Threaded M12/Euro-Style Cordsets—Double Ended				
Model (8-pin/8-pin)[4]	Length	Style	Dimensions	Pinout
DEE2R-81D	0.31 m (1 ft)	Female Straight/ Male Straight	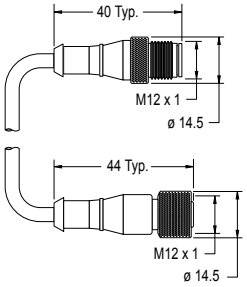	Female 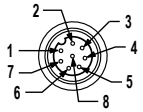 Male 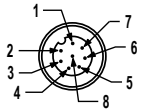
DEE2R-83D	0.91 m (3 ft)			
DEE2R-88D	2.44 m (8 ft)			
DEE2R-815D	4.57 m (15 ft)			
DEE2R-825D	7.62 m (25 ft)			
DEE2R-850D	15.2 m (50 ft)			
DEE2R-875D	22.9 m (75 ft)			
DEE2R-8100D	30.5 m (100 ft)			1 = White 2 = Brown 3 = Green 4 = Yellow 5 = Gray 6 = Pink 7 = Blue 8 = Red

See Banner Engineering catalog or *www.bannerengineering.com* for additional models and complete information.

Series Hookup Cordset Solution

This interconnection solution allows for quick hookup of a series of string emergency stop buttons. For the models listed below, Branch #1 and Branch #2 are 300 mm (12 in) in length and the length of the trunk is listed below.

WARNING: Intentional Defeat

The CSS Series Hookup Cordsets must be installed so that they cannot be easily defeated. Ensure that mounting and routing of the cordsets that are connected to the Trunk, Branch #1, Branch #2, and the E-Stop QD connector does not allow access to the QD connectors or allow improper connection bypassing the function of the Emergency Stop.

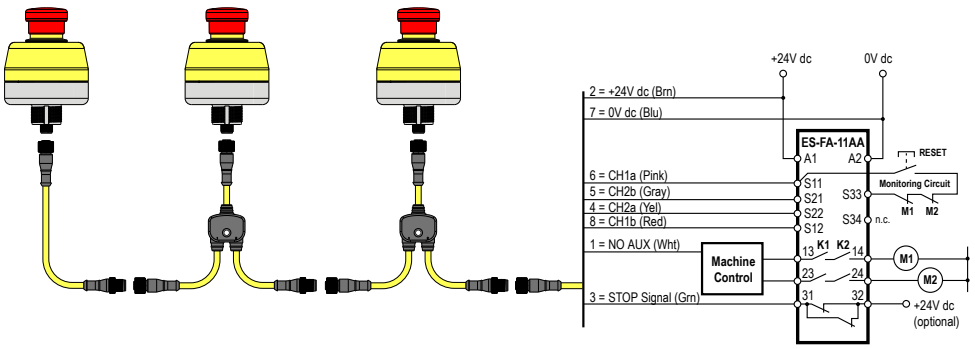

[4] Standard cordsets are yellow PVC with black overmold. For black PVC and overmold, add suffix "B" to model number (example, DEE2R-81DB)

Model	Length	Description
CSS-M12F81M12M81M12F81	1 ft	8-pin M12 QD splitter cordset for use with SSA-EB1PLxR-12ECQ8
CSS-M12F83M12M81M12F81	3 ft	
CSS-M12F88M12M81M12F81	8 ft	

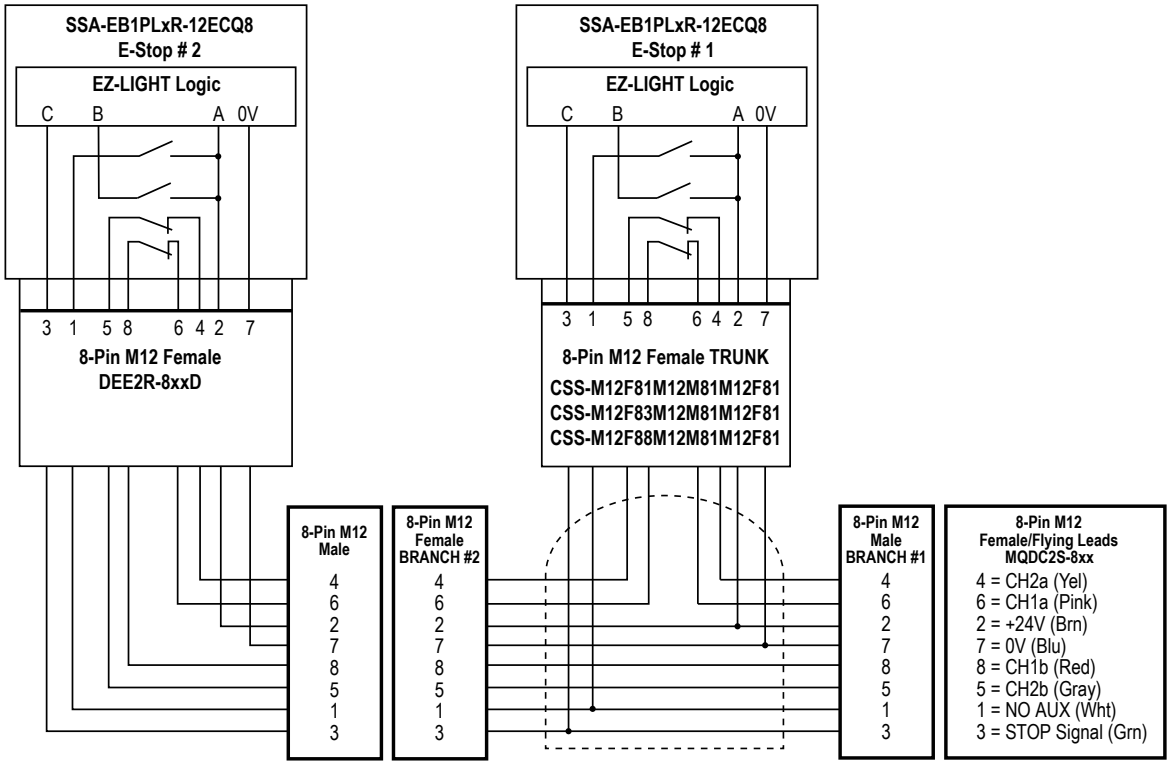

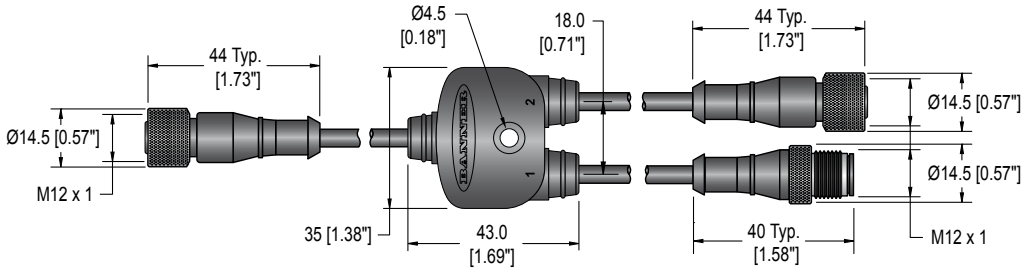

U.S. Application Standards

ANSI B11.0 Safety of Machinery; General Requirements and Risk Assessment

ANSI B11.19 Performance Criteria for Safeguarding

ANSI NFPA 79 Electrical Standard for Industrial Machinery

International/European Standards

ISO 12100 Safety of Machinery – General Principles for Design — Risk Assessment and Risk Reduction

ISO 13850 (EN 418) Emergency Stop Devices, Functional Aspects – Principles for Design

IEC 62061 Functional Safety of Safety-Related Electrical, Electronic and Programmable Control Systems

ISO 13849-1 (EN 954-1) Safety-Related Parts of Control Systems

IEC 60204-1 Electrical Equipment of Machines Part 1: General Requirements

IEC 60947-1 Low Voltage Switchgear – General Rules

IEC 60947-5-1 Low Voltage Switchgear – Electromechanical Control Circuit Devices

IEC 60947-5-5 Low Voltage Switchgear – Electrical Emergency Stop Device with Mechanical Latching Function

EC Declaration of Conformity (DoC)

Banner Engineering Corp. herewith declares that the SSA-EB1(2).. Emergency Stop Push Buttons are in conformity with the provisions of the Machinery Directive (Directive 2006/42/EC) and all essential health and safety requirements have been met.

Representative in EU: Peter Mertens, Managing Director Banner Engineering Europe. Address: Park Lane, Culliganlaan 2F, 1831 Diegem, Belgium.

Banner Engineering Corp Limited Warranty

Banner Engineering Corp. warrants its products to be free from defects in material and workmanship for one year following the date of shipment. Banner Engineering Corp. will repair or replace, free of charge, any product of its manufacture which, at the time it is returned to the factory, is found to have been defective during the warranty period. This warranty does not cover damage or liability for misuse, abuse, or the improper application or installation of the Banner product.

THIS LIMITED WARRANTY IS EXCLUSIVE AND IN LIEU OF ALL OTHER WARRANTIES WHETHER EXPRESS OR IMPLIED (INCLUDING, WITHOUT LIMITATION, ANY WARRANTY OF MERCHANTABILITY OR FITNESS FOR A PARTICULAR PURPOSE), AND WHETHER ARISING UNDER COURSE OF PERFORMANCE, COURSE OF DEALING OR TRADE USAGE.

This Warranty is exclusive and limited to repair or, at the discretion of Banner Engineering Corp., replacement. IN NO EVENT SHALL BANNER ENGINEERING CORP. BE LIABLE TO BUYER OR ANY OTHER PERSON OR ENTITY FOR ANY EXTRA COSTS, EXPENSES, LOSSES, LOSS OF PROFITS, OR ANY INCIDENTAL, CONSEQUENTIAL OR SPECIAL DAMAGES RESULTING FROM ANY PRODUCT DEFECT OR FROM THE USE OR INABILITY TO USE THE PRODUCT, WHETHER ARISING IN CONTRACT OR WARRANTY, STATUTE, TORT, STRICT LIABILITY, NEGLIGENCE, OR OTHERWISE.

Banner Engineering Corp. reserves the right to change, modify or improve the design of the product without assuming any obligations or liabilities relating to any product previously manufactured by Banner Engineering Corp.