Brand of NTN corporation

Technical data

UCPG210

Bearing units



Grey cast housing, radial insert ball bearing with socket set screws,seal with slinger

KIT CONTENT

UC210G2, PG210

VISUAL (S)

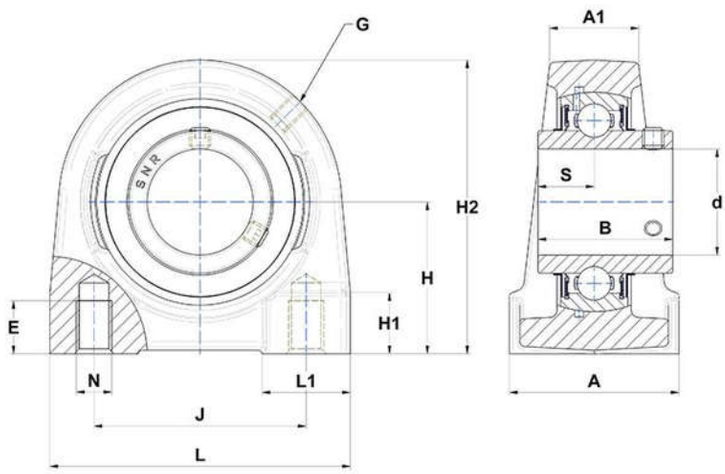

PRODUCT DEFINITION

Brand	SNR
A - Housing width	60 mm
A1 - Housing top width	35 mm
B - Width of Inner Ring	51,6 mm
d - Shaft diameter	50 mm
E - Mounting hole thread depth	25 mm

NTN Europe
1 rue des Usines · BP 2017 · 74010 Annecy Cedex · France · Tel. +33 (0)4 50 65 30 00
S.A. au capital de 322 639 919 € · RCS ANNECY B 325 821 072 · Id. Fiscale : FR 48 325 821 072
SIRET 325 821 072 00015 · Code APE 2815 Z · Code NACE 28.15

PRODUCT DEFINITION	
G - Grease fitting	M6x1
H - Distance mounting base to centerline spheric. seating diam.	57,2 mm
H1 - Housing foot height	21 mm
H2 - Housing height	114 mm
J - Mounting holes distance	95 mm
L - Housing length	135 mm
L1 - Housing foot length	40 mm
N - Mounting hole dimension	M16
S - Distance front side/bearing centre	19 mm

PRODUCT PERFORMANCE	
C - Dynamic load rating	35100000 mN
C0 - Static load rating	23200000 mN
Operating temperature min.	253,15 °K
Operating temperature max.	373,15 °K

OTHER FEATURES	
Mass	2,8 kg
Recommended tightening torque for set screw	22 N-m