AC Filter, DIN Rail Mounting

new



Description

- Chassis:
  DIN rail mounting
- Line filter in industrial version, 1 stage, high attenuation
- Especially effective against asymmetrical interferences in the frequency range from 100kHz up to 30MHz

Approvals

- VDE Certificate Number: 40030734
- UL File Number: E72928

Characteristics

- Protection against interference voltage from the mains
  Possible interferences generated in the equipment are strongly attenuated
- Especially designed for electric switch and control cabinets
- Suitable for use in equipment according to IEC/UL 60950

Weblinks

pdf-datasheet, html-datasheet, General Product Information, Approvals, CE declaration of conformity, RoHS, CHINA-RoHS, REACH, e-Shop, SCHURTER-Stock-Check, Distributor-Stock-Check, Detailed request for product

Technical Data

Ratings IEC	10 - 20 A @ Ta 40 °C / 250 VAC; 50 Hz
Ratings UL/CSA	10 - 20 A @ Ta 40 °C / 125/250 VAC; 60 Hz
Leakage Current	industrial < 2.1 mA (250 V / 50 Hz)
Dielectric Strength	1.7 kVDC between L-N 2.7 kVDC between L/N-PE Test voltage (2 sec)
Allowable Operation Temp.	-25 °C to 100 °C
Climatic Category	25/100/21 acc. to IEC 60068-1
Degree of Protection	IP 20 IEC 60529
Protection Class	Suitable for appliances with protection class I acc. to IEC 61140
Terminal	Bolts and nuts M4, Quick connect terminal for PE
Material: Housing	Metal

Line Filter	Industrial Version, IEC 60939, UL 1283, CSA C22.2 no. 8 Technical Details
MTBF	> 200'000 h acc. to MIL-HB-217 F

Dimension

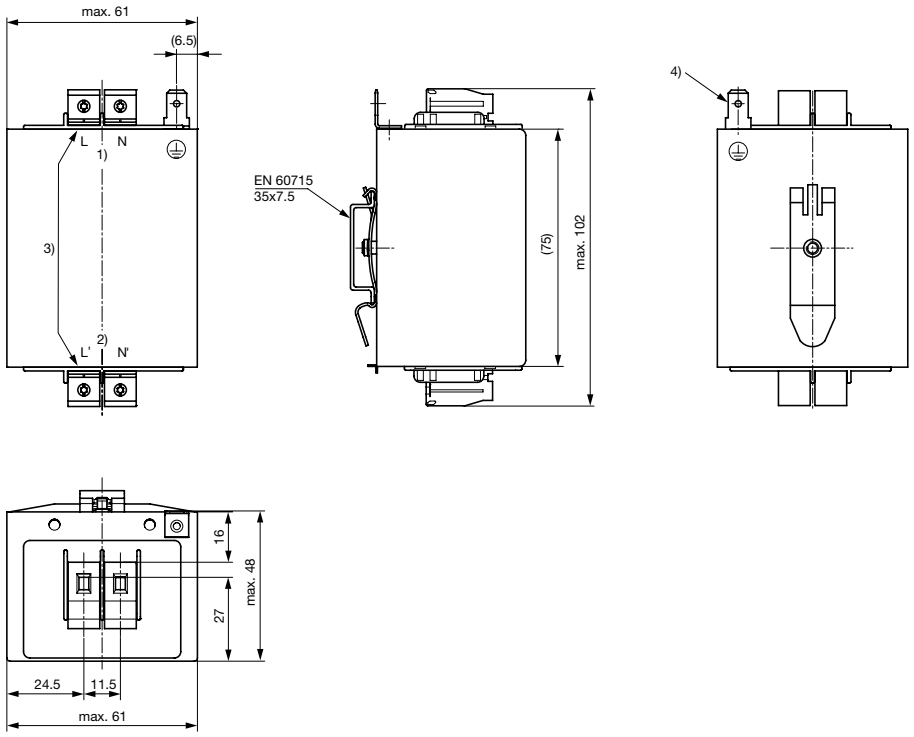

1) Line
2) Load
3) Tightening torque 0.6-0.8 Nm, Screw 4mm²
4) Quick connect terminal 6.3x0.8mm

Diagrams

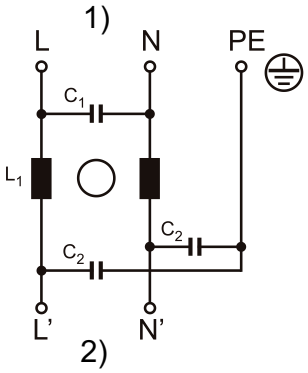

1) Line
2) Load

Attenuation Loss

. . . . . 0.1/100Ω differential mode ..... 100/0.1Ω differential mode - - - - differential mode _____ common mode

Industrial version

10 A

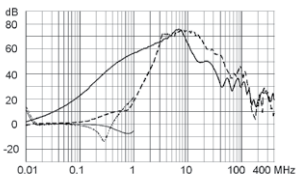

20 A

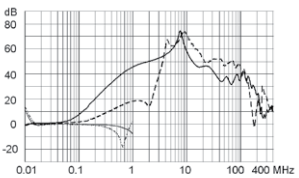

All Variants

Rated Current [A]	Leakage Current [mA] 1)	L [mH]	C1 (X2) [nF]	C2 (Y2) [nF]	Weight [g]	Screw clamps [mm²] 2)	Order Number
10	2.1	2 x 1	68	22	358 g	4	5500.2261
20	2.1	2 x 0.15	68	22	380 g	4	5500.2262

Availability for all products can be searched real-time:http://www.schurter.com/en/Stock-Check/Stock-Check-SCHURTER

1) Leakage current acc. IEC60950 - 5.2.3 - Annex D (situation when neutral is interrupted)

2) Maximum conductor cross section (wire gauge) to be used; a comparative table for AWG and mm² values can be found in the general product information www.schurter.com/emc_info

Packaging unit 5 Pcs

04.03.2015

The specifications, descriptions and illustrations indicated in this document are based on current information. All content is subject to modifications and amendments. Information furnished is believed to be accurate and reliable. However, users should independently evaluate the suitability and test each product selected for their own applications.