Product datasheet

Specifications



inductive sensor XS2 M30 - L63mm - stainless - Sn22mm - 24..240VAC/DC - L2m

XS230SAMAL2

Main

Range of product	Telemecanique Inductive proximity sensors XS
Series name	Application
Sensor type	Inductive proximity sensor
Device application	Food and beverage
Market segment	Pharmaceutical
Sensor name	XS2
Sensor design	Cylindrical M30
Size	63 mm
Body type	Fixed
Detector flush mounting acceptance	Non flush mountable
Material	Stainless steel
Type of output signal	Discrete
Wiring technique	2-wire
[Sn] nominal sensing distance	22 mm
Discrete output function	1 NO
Output circuit type	AC/DC
Electrical connection	Cable
Cable length	2 m
[Us] rated supply voltage	24...240 V AC 50/60 Hz 24...240 V DC
Switching capacity in mA	5...200 mA DC 5...300 mA AC
IP degree of protection	IP68 double insulation conforming to IEC 60529 IP69K conforming to DIN 40050

Complementary

Thread type	M30 x 1.5
Detection face	Frontal
Front material	PPS
Enclosure material	Stainless steel 316 L

Disclaimer: This documentation is not intended as a substitute for and is not to be used for determining suitability or reliability of these products for specific user applications

Sensing range	> 15...40 mm
Operating zone	0…17.6 mm
Differential travel	1...15% of Sr
Cable composition	2 x 0.34 mm²
Wire insulation material	PVC
Status LED	Output state: 1 LED (yellow)
Supply voltage limits	20…264 V AC/DC
Maximum residual current	0.8 mA open state
Switching frequency	<= 25 Hz AC <= 300 Hz DC
Maximum voltage drop	<5.5 V (closed)
Maximum delay first up	30 ms
Maximum delay response	0.5 ms
Maximum delay recovery	2 ms
Marking	CE
Threaded length	41 mm
Length	63 mm
Net weight	0.205 kg

Environment

Product certifications	UL CCC CSA
Ambient air temperature for operation	-25…85 °C
Ambient air temperature for storage	-40…85 °C
Vibration resistance	25 gn amplitude = +/- 2 mm (f = 10…55 Hz) conforming to IEC 60068-2-6
Shock resistance	50 gn for 11 ms conforming to IEC 60068-2-27

Packing Units

Unit Type of Package 1	PCE
Number of Units in Package 1	1
Package 1 Weight	182.0 g
Package 1 Height	3.5 cm
Package 1 width	8 cm
Package 1 Length	20.5 cm
Unit Type of Package 2	S01
Number of Units in Package 2	11
Package 2 Weight	2.2 kg
Package 2 Height	15 cm
Package 2 width	15 cm
Package 2 Length	40 cm
Package 3 Height	15 cm

Offer Sustainability

Sustainable offer status	Green Premium product
REACh Regulation	REACh Declaration
EU RoHS Directive	Pro-active compliance (Product out of EU RoHS legal scope) EU RoHS Declaration
Mercury free	Yes
RoHS exemption information	Yes
Environmental Disclosure	Product Environmental Profile
Circularity Profile	End of Life Information

Contractual warranty

Warranty	18 months

Product datasheet XS230SAMAL2

Dimensions Drawings

Dimensions

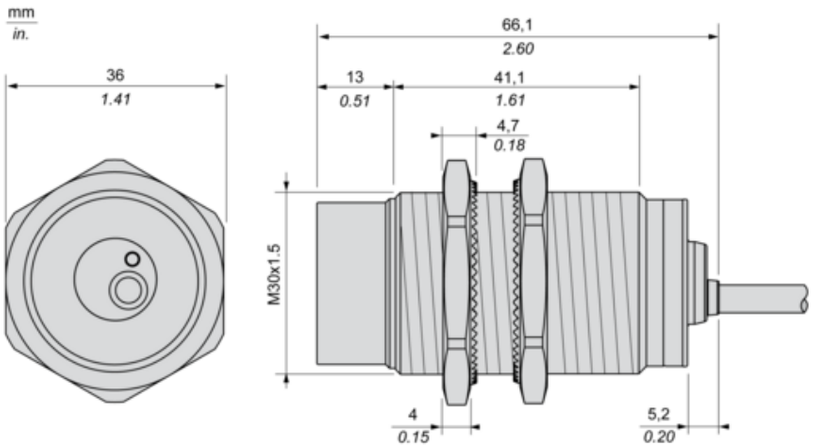

Product datasheet XS230SAMAL2

Mounting and Clearance

Minimum Mounting Distances in mm

Side by side

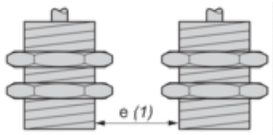

e (1) ≥ 120 mm/4.72 in.

Face to face

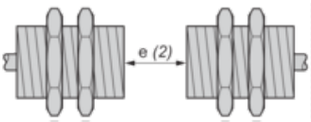

e (2) ≥ 264 mm/10.39 in.

Facing a metal object

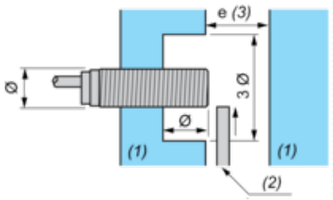

e (3) ≥ 66 mm/2.60 in.

(4) Metal

(5) Object to be detected

Product datasheet XS230SAMAL2

Connections and Schema

Wiring Schemes

2-Wire AC or DC

NO output

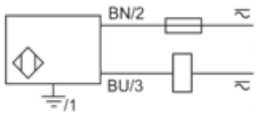

BU : Blue

BN : Brown