MATERIAL NUMBER	ENGINEERING NUMBER
1200710040	8A4007-31

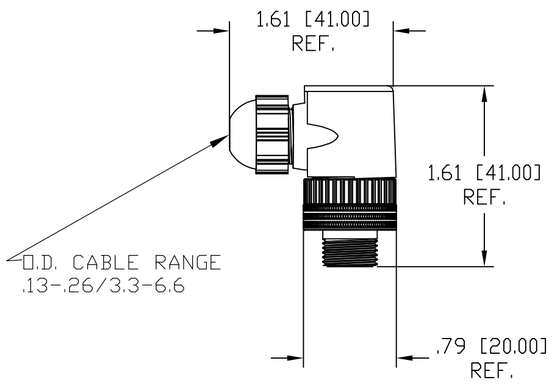

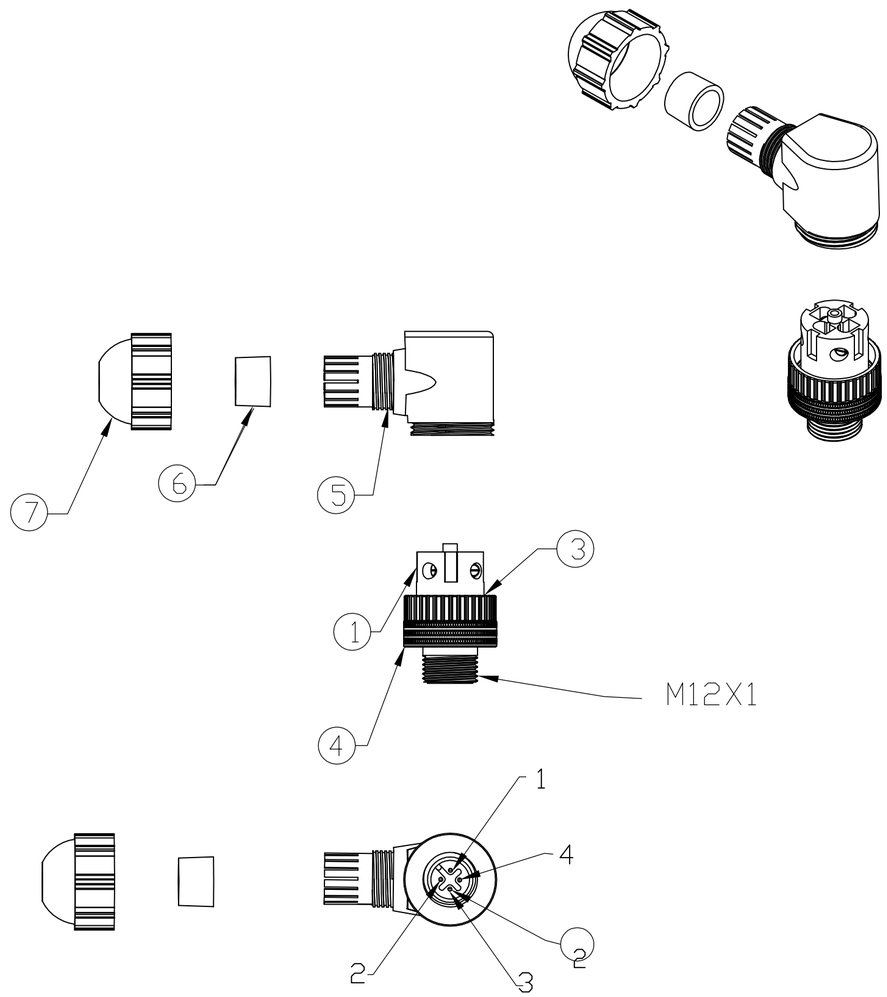

MALE FACE VIEW

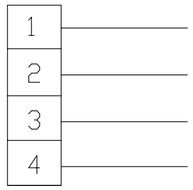

WIRING CHART

ITEM		COMPONENT	MATERIAL	FINISH
1	1	INSERT	POLYAMIDE	BLACK
2	4	CONTACTS	COPPER ALLOY	SILVER PLATED
3	1	O-RING	NITRILE	BLACK
4	1	COUPLING NUT	BRASS	NICKEL PLATED
5	1	MOLDED BODY	POLYAMIDE	BLACK
6	1	GROMMET	NITRILE	BLACK
7	1	CORD GRIP BODY	POLYAMIDE	BLACK

VOLTAGE RATING	250VAC/300VDC
AMPERAGE RATING	4 AMPS
PROTECTION	IP67
OPERATING TEMPERATURE	-25°C TO 90°C
CSA CERTIFICATIONS	CSA CERTIFIED, FILE NO. LR6837

RELEASE
EC NO: WEU2010-0045 8/17/09
DRWN: TWOLDEGE ---
CH'KD: BWOODMAN
APPR: JFMURPHY 2009/08/21
DESCRIPTION
A
REV

QUALITY SYMBOL
▼=0
Ⓒ=0

GENERAL TOLERANCES (UNLESS SPECIFIED)

	mm	INCH
4 PLACES	±----	±----
3 PLACES	±----	±----
2 PLACES	±----	±.01
1 PLACE	±0.3	±----
ANGULAR ±----°		

DRAFT WHERE APPLICABLE MUST REMAIN WITHIN DIMENSIONS

DIMENSION STYLE: ----
SCALE: ----
DESIGN UNITS: INCH
THIRD ANGLE PROJECTION

DRAWN BY DATE: TWOLDEGE 2009/08/17
CHECKED BY DATE: BWOODMAN 2009/08/17
APPROVED BY DATE: ---- ----

TITLE
MIC 4P MALE ATTACH 90D
.13-.26 O.D. CABLE RANGE
PG7 CABLE FITTING

molex MOLEX INCORPORATED

MATERIAL NO.: 1200710040
DOCUMENT NO.: SD-120071-008
SHEET NO.: 1 0F 1
SIZE: C

THIS DRAWING CONTAINS INFORMATION THAT IS PROPRIETARY TO MOLEX INCORPORATED AND SHOULD NOT BE USED WITHOUT WRITTEN PERMISSION