Product data sheet
Characteristics

XS1N30PC410TF
inductive sensor XS1 M30 - L41mm - brass - Sn10mm - 12..24VDC - cable 2m



Main

Range of product	OsiSense XS
Series name	General purpose
Sensor type	Inductive proximity sensor
Device application	Mobile equipment
Sensor name	XS1
Sensor design	Cylindrical M30
Size	41 mm
Body type	Fixed
Detector flush mounting acceptance	Flush mountable
Material	Metal
Type of output signal	Discrete
Wiring technique	4-wire
[Sn] nominal sensing distance	10 mm
Discrete output function	1 NO + 1 NC
Output circuit type	DC
Discrete output type	PNP
Electrical connection	Cable
Cable length	2 m
[Us] rated supply voltage	12...24 V DC with reverse polarity protection
Switching capacity in mA	<= 200 mA with overload and short-circuit protection
IP degree of protection	IP68 conforming to IEC 60529 IP65

Complementary

Safety level	SIL 2 conforming to EN/IEC 61508 PL = d conforming to EN/ISO 13849-1 SILCL 2 conforming to IEC 62061
Safety reliability data	MTTFd = 1810 years PFHd = 62.9E-9 1/h SFF = 92 % DC = 74 % with appropriate safety controller
Service life	20 yr
Thread type	M30 x 1.5
Detection face	Frontal
Front material	PPS
Enclosure material	Nickel plated brass
Operating zone	0...8 mm
Differential travel	1...15% of Sr
Cable composition	4 x 0.22 mm²
Wire insulation material	PvR
Status LED	1 LED yellow for output state
Supply voltage limits	9...36 V DC
Switching frequency	<= 1000 Hz
Voltage drop	<= 2 V at closed state

The information provided in this documentation contains general descriptions and/or technical characteristics of the performance of the products contained herein.
This documentation is not intended as a substitute for and is not to be used for determining suitability or reliability of these products for specific user applications.
It is the duty of any such user or integrator to perform the appropriate and complete risk analysis, evaluation and testing of the products with respect to the relevant specific application or use thereof.
Neither Schneider Electric Industries SAS nor any of its affiliates or subsidiaries shall be responsible or liable for misuse of the information contained herein.

Current consumption	0...10 mA at no-load
Delay first up	<= 5 ms
Delay response	<= 0.3 ms
Delay recovery	<= 0.7 ms
Marking	CE
Threaded length	33 mm
Height	30 mm
Length	45 mm

Environment

Standards	EN/ISO 13849-1 IEC 62061
Product certifications	CSA TÜV UL E2
Ambient air temperature for operation	-40...70 °C
Ambient air temperature for storage	-40...85 °C
Vibration resistance	25 gn amplitude = +/- 2 mm (f = 10...55 Hz) conforming to IEC 60068-2-6
Shock resistance	50 gn for 11 ms conforming to IEC 60068-2-27

Offer Sustainability

Sustainable offer status	Green Premium product
RoHS (date code: YYWW)	Compliant - since 0811 - Schneider Electric declaration of conformity
REACh	Reference not containing SVHC above the threshold
Product environmental profile	Available Download Product Environmental
Product end of life instructions	Available Download End Of Life Manual

Dimensions

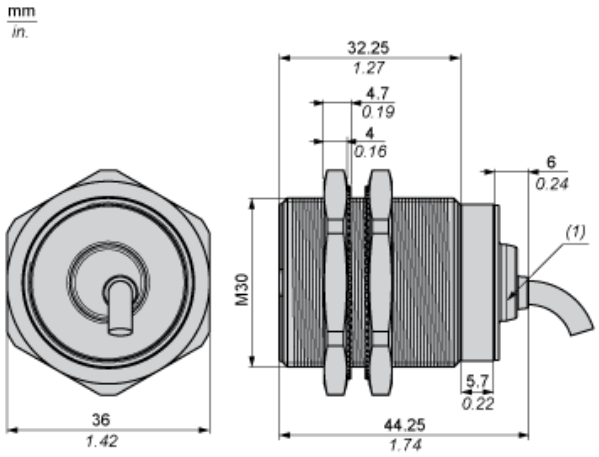

(1) LED

Minimum Mounting Distances

Side by side

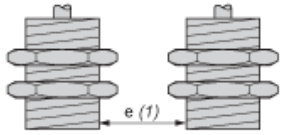

e (1) 20 mm/0.79 in
≥

Face to face

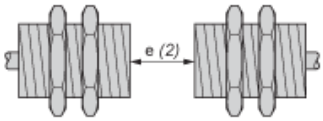

e (2) 120 mm/4.72 in
≥

Facing a metal object

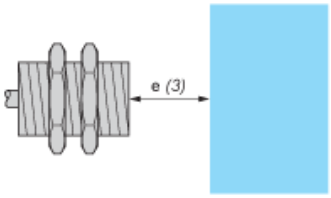

e (3) 30 mm/1.18 in.
≥

Wiring Schemes

PNP 4-wire

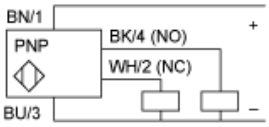

BU : Blue
BN : Brown
BK : Black
WH : White

Performance Curves

Standard Steel Target : 30x30x1 mm

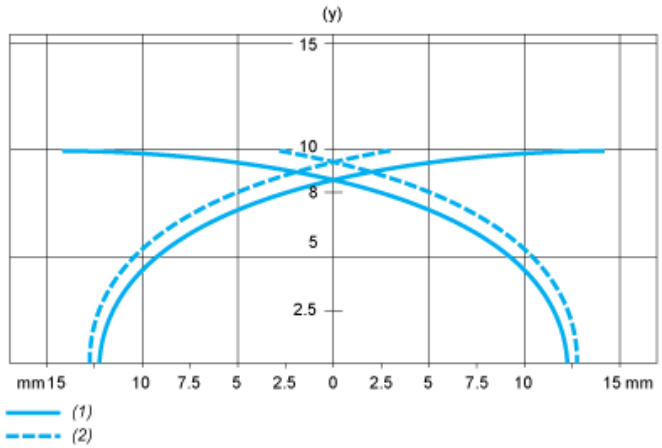

(1) Pick-up points
(2) Drop-out points (object approaching from the side)
(y) Sensing distance in mm