efector100

IGS208 **Inductive sensors**

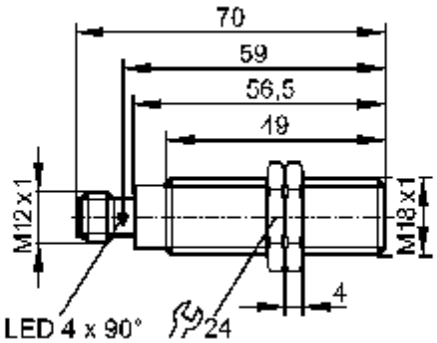

Made in Germany

Product characteristics	
Inductive sensor	
Metal thread M18 x 1	
Connector	
Operation as 3-wire or 2-wire possible	
Increased sensing range	
Optical setting aid (2 LED)	
gold-plated contacts	
Sensing range 8 mm [f]	
flush mountable	

Electrical data		
Electrical design		3-wire DC PNP; 2-wire DC PNP/NPN
Operating voltage	[V]	10...30 DC
Current consumption	[mA]	< 12 (24 V)
Protection class		II
Reverse polarity protection		yes

Outputs		
Output function		normally open
Voltage drop	[V]	< 2.8
Minimum load current	[mA]	2 *)
Leakage current	[mA]	< 0.5 *)
Current rating	[mA]	100
Short-circuit protection		pulsed
Overload protection		yes

Switching frequency	[Hz]	400
Range		
Sensing range	[mm]	8
Real sensing range (Sr)	[mm]	8 ± 10 %
Operating distance	[mm]	0...6.5
Accuracy / deviations		
Correction factors		mild steel = 1 / stainless steel approx. 0.7 / brass approx. 0.5 / Al approx. 0.4 / Cu approx. 0.3
Hysteresis	[% of Sr]	3...15
Switch-point drift	[% of Sr]	-10...10
Environment		
Ambient temperature	[°C]	-25...70
Protection		IP 67
Tests / approvals		
EMC		EN 61000-4-2 ESD: 4 kV CD / 8 kV AD EN 61000-4-3 HF radiated: 10 V/m (80...1000 MHz) EN 61000-4-4 Burst: 2 kV EN 61000-4-6 HF conducted: 10 V (0.15...80 MHz) EN 55011: class B
MTTF	[Years]	1364
Mechanical data		
Mounting		flush mountable
Housing materials		brass white bronze coated; active face: PBT (Pocan)
Weight	[kg]	0.055
Displays / operating elements		
Output status indication	LED	yellow
Setting aid	LED	red
Electrical connection		
Connection		M12 connector; gold-plated contacts

Wiring



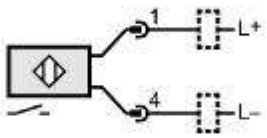

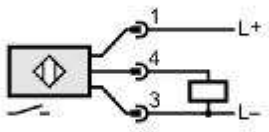

Accessories	
Accessories (included)	2 lock nuts

Remarks	
Remarks	suitable for PLC type 1 according to IEC 61131-2 *) only in 2-wire operation

ifm electronic gmbh • Friedrichstraße 1 • 45128 Essen — We reserve the right to make technical alterations without prior notice. — GB — IGS208-00 — 18/02.2008