E33407

Process adapter DIN 11864

ADAPT DIN11864-3-NKS-A/DN32 / G1/2

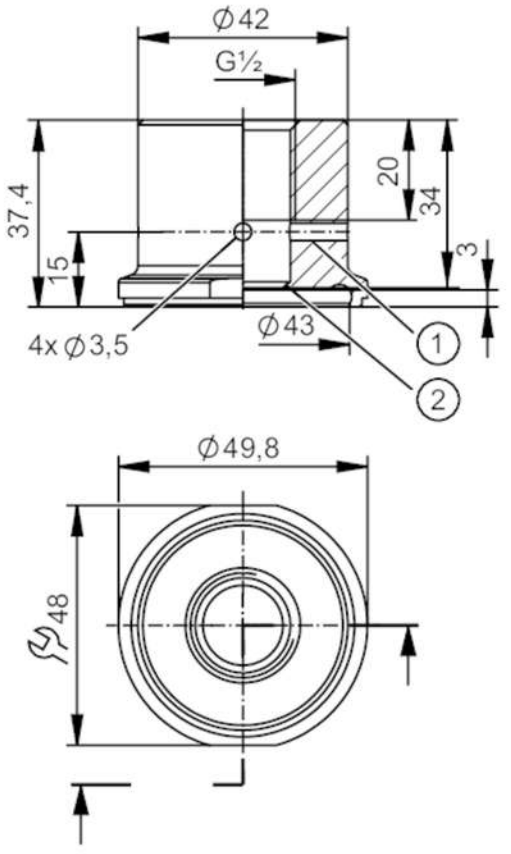

1 Leakage port
2 sealing edge

Application		
Design		with leakage port, for pipes, DN 32 (DIN 11866, Reihe A)
Pressure rating	[bar]	40
Note on pressure rating		for the connection sensor - adapter
Tests / approvals		
Pressure Equipment Directive		A possible classification to PED depends on the application and has to be carried out by the user / operator.
Pressure Equipment Directive EAC		The adapter is intended for use in devices, machines and installations that do not fall under the categories of the technical rule TR CU 032/2013.
Safety instructions		The compatibility between medium and product material has to be checked in all applications.
Mechanical data		
Weight	[g]	365
Materials (wetted parts)		stainless steel (1.4435 / 316L) ; surface characteristics : Ra<0,4 / Rz 4
Sensor connection		G 1/2 sealing cone
Process connection		Clamp DN32 DIN 11864-3-A-NKS
Remarks		
Pack quantity		1 pcs.