Brand of NTN corporation

Technical data

USFCE210

Bearing units



Grey cast housing, radial insert ball bearing with socket set screws, single lip seal

KIT CONTENT

US210G2, FCE210

VISUAL (S)

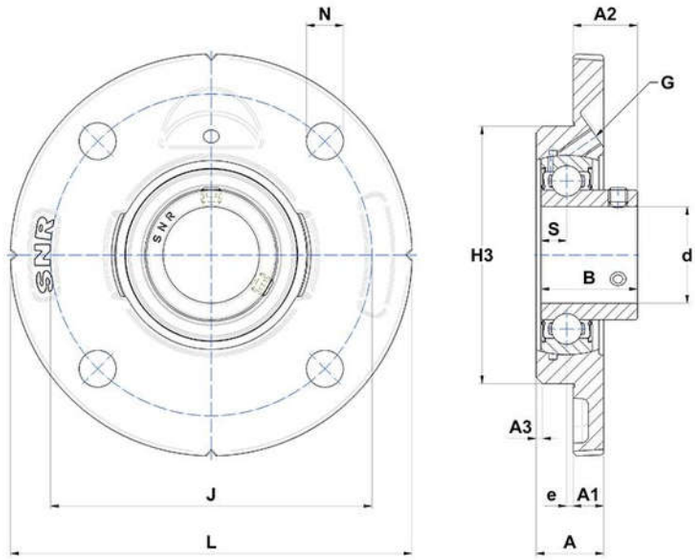

PRODUCT DEFINITION

Brand	SNR
A - Housing height	25,5 mm
A1 - Housing foot height / flange height	13 mm
A2 - Total height from mounting surface	31,6 mm
A3 - Centering depth / chamfer dimension	3 mm
B - Width of Inner Ring	43,5 mm

USFCE210
Bearing units

PRODUCT DEFINITION	
d - Shaft diameter	50 mm
e - Distance mounting surface to bearing center	-1 mm
G - Grease fitting	M8x1
H3 - Centering dia	110 mm
J - Mounting holes distance	135 mm
L - Housing width / diameter	165 mm
N - Mounting hole dimension	14 mm
S - Distance front side/bearing centre	10,9 mm

PRODUCT PERFORMANCE	
C - Dynamic load rating	35100000 mN
C0 - Static load rating	23200000 mN
Operating temperature min.	253,15 °K
Operating temperature max.	373,15 °K

OTHER FEATURES	
Mass	2,16 kg
Recommended tightening torque for set screw	11.5 N-m