MR0123

T-slot cylinder sensor with reed contact

MRT3021BBKOA/R/6,0M/ZH

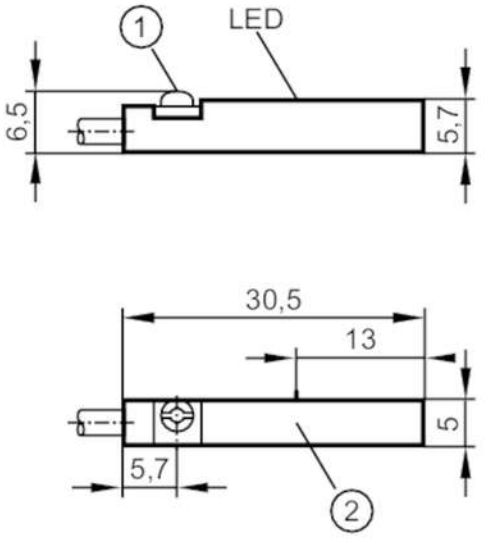

1 fastening clamp with combined slot / hexagon socket head hexagonal socket AF 1.5
2 Sensing face

Product characteristics		
Electrical design		PNP
Output function		normally open
Dimensions	[mm]	30.5 x 5 x 6.5
Electrical data		
Operating voltage	[V]	5...50 AC/DC; (External protective circuit for inductive load (valve, contactor, etc.) necessary. ; "supply class 2" to cULus)
Protection class		III
Reverse polarity protection		yes
Reverse polarity protection		no
Outputs		
Electrical design		PNP
Output function		normally open
Max. voltage drop switching output DC	[V]	1
Max. voltage drop switching output AC	[V]	1
Permanent current rating of switching output AC	[mA]	350
Permanent current rating of switching output DC	[mA]	500
Switching frequency AC	[Hz]	1000
Switching frequency DC	[Hz]	1000
Max. switching power	[W]	10
Short-circuit protection		no
Short-circuit proof		no

MR0123

T-slot cylinder sensor with reed contact

MRT3021BBKOA/R/6,0M/ZH

Overload protection		no	
Detection zone			
Response sensitivity	[mT]	2.1	
Travel speed	[m/s]	10	
Accuracy / deviations			
Hysteresis	[mm]	1	
Repeatability	[mm]	< 0.2	
Response times			
Max. fall time	[ms]	0.1	
Max. make time incl. bounce	[ms]	0.6	
Operating conditions			
Ambient temperature	[°C]	-25...70	
Protection		IP 65; IP 67	
Tests / approvals			
EMC		EN 61000-4-2 ESD	- CD / 8 kV AD
		EN 61000-4-3 HF radiated	10 V/m
		EN 61000-4-4 Burst	2 kV
		EN 61000-4-6 HF conducted	10 V
		EN 55011	class B
MTTF	[years]	20385	
UL approval		UL Approval no.	C004
Mechanical data			
Weight	[g]	72	
Mounting		flush mountable	
Cylinder type		T-slot cylinders	
Dimensions	[mm]	30.5 x 5 x 6.5	
Materials		PA; fastening clamp: stainless steel	
Displays / operating elements			
Display		switching status	1 x LED, yellow
Electrical connection			
Required protection		miniature fuse to IEC60127-2 sheet 1; ≤ 0,75 A; fast acting; DC operation; ≤ 0,6 A; fast acting; AC operation	
Accessories			
Items supplied		rubber placeholder: 1	
		Cable clip: 1	
Remarks			
Pack quantity		1 pcs.	

MR0123

T-slot cylinder sensor with reed contact

MRT3021BBKOA/R/6,0M/ZH

Electrical connection

Cable: 6 m, PUR; 3 x 0.14 mm²

Connection

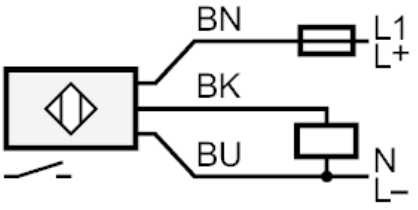

Note miniature fuse to IEC60127-2 sheet 1
≤ 0.75 A fast acting DC operation
≤ 0.6 A fast acting AC operation
Core colours :

BK =	black
BN =	brown
BU =	blue