JUMO GmbH & Co. KG
Delivery address: Mackenrodtstraße 14
36039 Fulda, Germany
Postal address: 36035 Fulda, Germany
Phone: +49 661 6003-0
Fax: +49 661 6003-607
Email: mail@jumo.net
Internet: www.jumo.net

JUMO Instrument Co. Ltd.
JUMO House
Temple Bank, Riverway
Harlow, Essex CM 20 2DY, UK
Phone: +44 1279 63 55 33
Fax: +44 1279 62 50 29
Email: sales@jumo.co.uk
Internet: www.jumo.co.uk

JUMO Process Control, Inc.
6733 Myers Road
East Syracuse, NY 13057, USA
Phone: +1 315 437 5866
Fax: +1 315 437 5860
Email: info.us@jumo.net
Internet: www.jumousa.com

Mineral-Insulated RTD Temperature Probe According to DIN EN 60751

- **For temperatures from -50 (-200) to +600 °C**
- **Flexible sheath cable with vibration-resistant measuring insert**
- **As single or double RTD temperature probe in two-wire, three-wire, or four-wire circuit**
- **Quick response time**
- **Application-specific insertion length**



Due to their specific features, mineral-insulated RTD temperature probes are used in chemical plants, power plants, pipelines, engine building, test rigs, and any measuring locations requiring flexibility and simple replacement. Inside the flexible and thin-walled stainless steel sheath cable, the low ohmic conductor copper wires are embedded in compressed, heat-resistant magnesium oxide.

The temperature sensor with 2-wire, 3-wire, or 4-wire technology is connected to the conductor copper wires and installed in the stainless steel protection tube. The protection tube and sheath cable are welded to one another. They are available in diameters as low as 1.9 mm.

The good thermal transfer between the protection tube and temperature sensor enables short response times ($t_{0.5}$ from 0.7 s) and excellent measuring accuracy. The vibration-resistant construction guarantees a long operating life. The flexible probe tube allows temperatures to be measured at difficult-to-access points. The smallest bending radius is 5 times the outer diameter. From an insertion length of approximately 1000 mm, the mineral-insulated RTD temperature probes are delivered in a rolled up state.

The measuring insert is normally fitted with a Pt100 temperature sensor according to DIN EN 60751, class B in 2-wire circuit; versions with Pt500 or Pt1000 can be ordered as well. The connection is also available in 3-wire and 4-wire circuits and in tolerance classes A and AA.

Technical data

Terminal head	Form B, die-cast aluminum, M20 × 1.5; IP65, ambient temperature -40 to +100 °C Form BUZ, die-cast aluminum, M20 × 1,5; IP65, ambient temperature -40 to +100 °C Form J, die-cast aluminum, M16 × 1.5; IP65, ambient temperature -40 to +100 °C Caution: reduced ambient temperature when using transmitters
Connection	Cable ends stripped bare; alternatively available with ferrules, plug-in sleeves, or multi-pole plug connectors
Connecting cable	PVC, ambient temperature -5 to +80 °C (+105 °C) Silicone, ambient temperature -50 to +180 °C PTFE, ambient temperature -190 to +260 °C Metal braiding, ambient temperature -50 to +260 °C (+350 °C)
Process connection	Thread, stainless steel 1.4571
Protection tube	Stainless steel 1.4571, Ø 1.9 mm, Ø 3 mm, and Ø 6 mm
Adapter sleeve (end closure)	As standard, the adapter sleeve (end closure) is designed up to 120 °C; it is available up to 300 °C upon request.
Measuring insert	Pt100/Pt500/Pt1000 temperature sensor, DIN EN 60751, class B, A, AA in 2-wire, 3-wire, or 4-wire circuit
Response times	In water with 0.4 m/s / in air with 3 m/s Ø 1.9 mm: water $t_{0.5}$ = 0.7 s, $t_{0.9}$ = 2.1 s/air $t_{0.5}$ = 7.2 s, $t_{0.9}$ = 20.5 s Ø 3.0 mm: water $t_{0.5}$ = 1.3 s, $t_{0.9}$ = 4.0 s/air $t_{0.5}$ = 13.5 s, $t_{0.9}$ = 41.0 s Ø 6.0 mm: water $t_{0.5}$ = 5.0 s, $t_{0.9}$ = 11.5 s/air $t_{0.5}$ = 37.5 s, $t_{0.9}$ = 117.5 s
Transmitters	Analog transmitter, output 4 to 20 mA, data sheet 707030 Programmable transmitter, output 4 to 20 mA/20 to 4 mA, data sheet 707010 Programmable transmitter, output 4 to 20 mA/20 to 4 mA and HART® interface, data sheet 707010 Programmable transmitter, output 4 to 20 mA/20 to 4 mA (USB), data sheet 707050

JUMO GmbH & Co. KG
Delivery address: Mackenrodtstraße 14
36039 Fulda, Germany
Postal address: 36035 Fulda, Germany
Phone: +49 661 6003-0
Fax: +49 661 6003-607
Email: mail@jumo.net
Internet: www.jumo.net

JUMO Instrument Co. Ltd.
JUMO House
Temple Bank, Riverway
Harlow, Essex CM 20 2DY, UK
Phone: +44 1279 63 55 33
Fax: +44 1279 62 50 29
Email: sales@jumo.co.uk
Internet: www.jumo.co.uk

JUMO Process Control, Inc.
6733 Myers Road
East Syracuse, NY 13057, USA
Phone: +1 315 437 5866
Fax: +1 315 437 5860
Email: info.us@jumo.net
Internet: www.jumousa.com

Dimensions

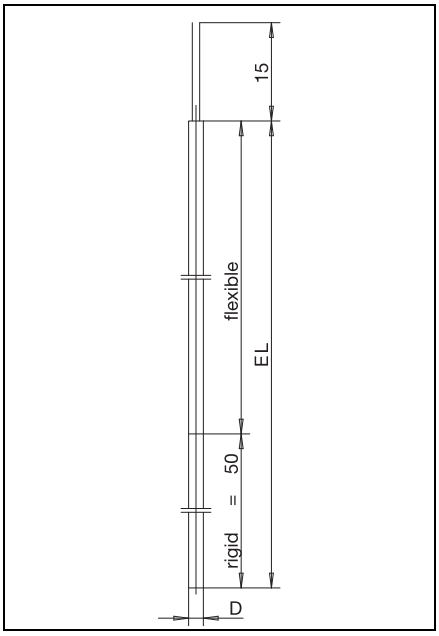

Basic type 902210/10

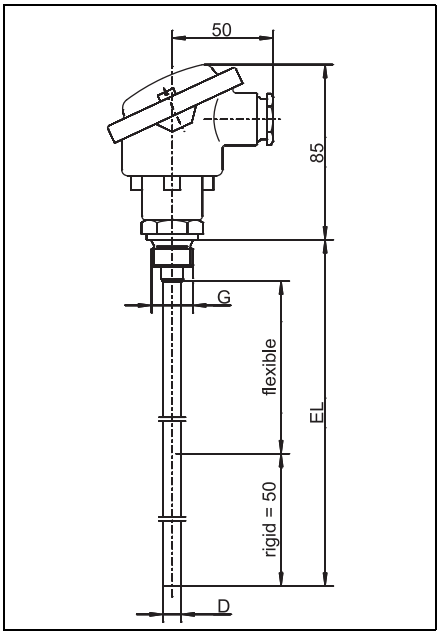

Basic type 902220/40

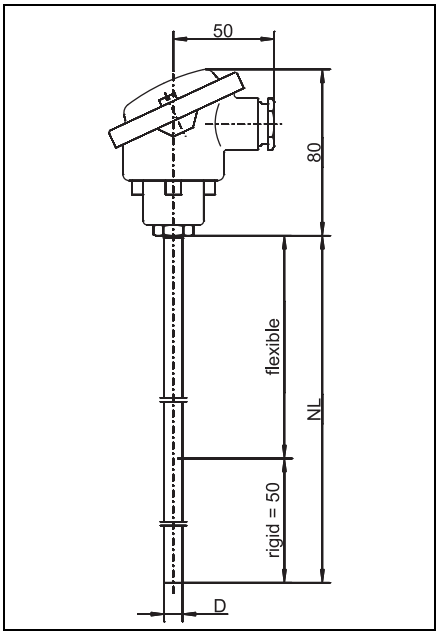

Basic type 902220/41

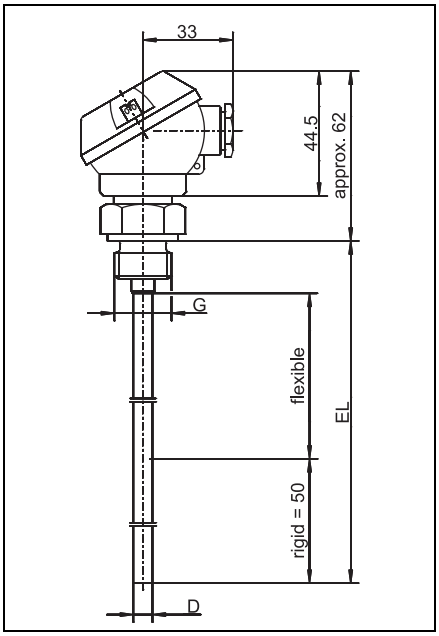

Basic type 902230/40

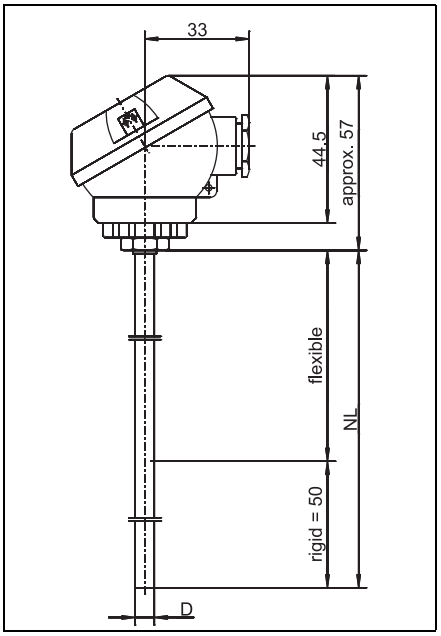

Basic type 902230/41

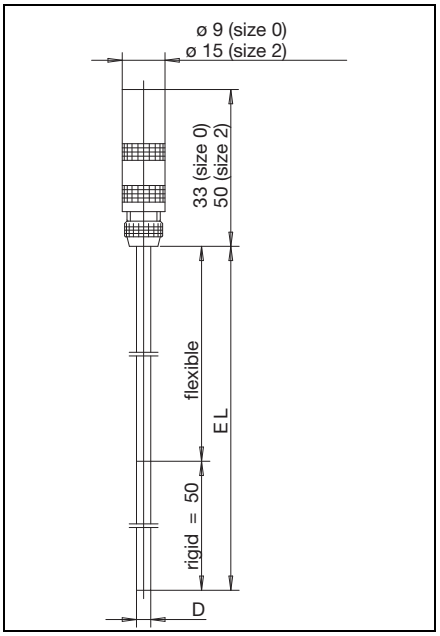

Basic type 902240/20

JUMO GmbH & Co. KG
Delivery address: Mackenrodtstraße 14
36039 Fulda, Germany
Postal address: 36035 Fulda, Germany
Phone: +49 661 6003-0
Fax: +49 661 6003-607
Email: mail@jumo.net
Internet: www.jumo.net

JUMO Instrument Co. Ltd.
JUMO House
Temple Bank, Riverway
Harlow, Essex CM 20 2DY, UK
Phone: +44 1279 63 55 33
Fax: +44 1279 62 50 29
Email: sales@jumo.co.uk
Internet: www.jumo.co.uk

JUMO Process Control, Inc.
6733 Myers Road
East Syracuse, NY 13057, USA
Phone: +1 315 437 5866
Fax: +1 315 437 5860
Email: info.us@jumo.net
Internet: www.jumousa.com

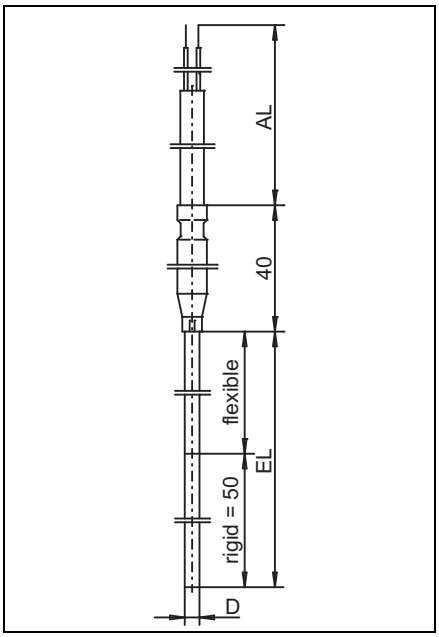

Basic type 902250/3x

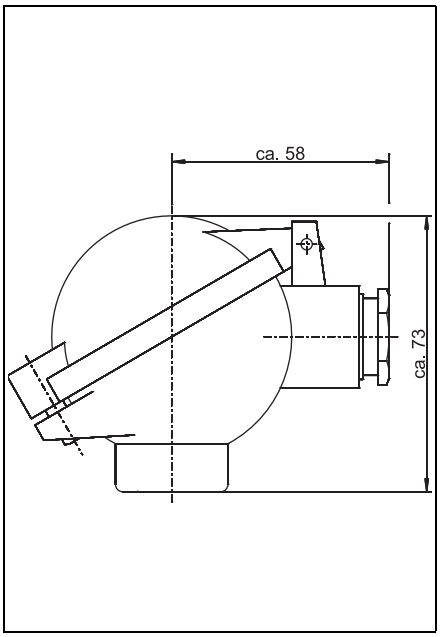

Terminal head form BUZ
Extra code 320

JUMO GmbH & Co. KG
Delivery address: Mackenrodtstraße 14
36039 Fulda, Germany
Postal address: 36035 Fulda, Germany
Phone: +49 661 6003-0
Fax: +49 661 6003-607
Email: mail@jumo.net
Internet: www.jumo.net

JUMO Instrument Co. Ltd.
JUMO House
Temple Bank, Riverway
Harlow, Essex CM 20 2DY, UK
Phone: +44 1279 63 55 33
Fax: +44 1279 62 50 29
Email: sales@jumo.co.uk
Internet: www.jumo.co.uk

JUMO Process Control, Inc.
6733 Myers Road
East Syracuse, NY 13057, USA
Phone: +1 315 437 5866
Fax: +1 315 437 5860
Email: info.us@jumo.net
Internet: www.jumousa.com

Order details

(1) Basic type

902210/10 — Mineral-insulated RTD temperature probe with bare connection wires



902240/20 — Mineral-insulated RTD temperature probe with LEMO-coupling



			(2)	**Operating temperature in °C**
x	x	150		-200 to +600 °C
x	x	415		-50 to +600 °C (standard)
			(3)	**Measuring insert**
x	x	1001		1× Pt100 in 3-wire circuit
x	x	1003		1× Pt100 in 2-wire circuit
x	x	1005		1× Pt1000 in 2-wire circuit (only for operating temperature -50 to +600 °C)
x	x	1006		1× Pt1000 in 3-wire circuit (only for operating temperature -50 to +600 °C)
x	x	1011		1× Pt100 in 4-wire circuit
x		2001		2× Pt100 in 3-wire circuit (only in combination with protection tube diameter 3 and 6 mm)
x	x	2003		2× Pt100 in 2-wire circuit (only in combination with protection tube diameter 3 and 6 mm)
			(4)	**Tolerance class according to DIN EN 60751**
x	x	1		Class B (standard)
x	x	2		Class A
x	x	3		Class AA
			(5)	**Protection tube diameter D in mm**
x	x	1.9		Ø 1.9 mm, for basic type 902240/20 incl. LEMO-coupling size 0 (sheath cable Ø 1.5 mm)
x	x	3		Ø 3.0 mm, for basic type 902240/20 incl. LEMO-coupling size 0
x	x	6		Ø 6.0 mm, for basic type 902240/20 incl. LEMO-coupling size 2
			(6)	**Insertion length EL in mm (at least 70 mm)**
x	x	...		Specification in plain text
			(7)	**Extra codes**
x	x	000		None
x	x	058		SIL and PL compatible

Further versions can be purchased upon request.

	(1)		(2)		(3)		(4)		(5)		(6)		(7)
Order code		-		-		-		-		-		/	
Order example	902240/20	-	415	-	1001	-	1	-	6	-	200	/	000

JUMO GmbH & Co. KG
Delivery address: Mackenrodtstraße 14
36039 Fulda, Germany
Postal address: 36035 Fulda, Germany
Phone: +49 661 6003-0
Fax: +49 661 6003-607
Email: mail@jumo.net
Internet: www.jumo.net

JUMO Instrument Co. Ltd.
JUMO House
Temple Bank, Riverway
Harlow, Essex CM 20 2DY, UK
Phone: +44 1279 63 55 33
Fax: +44 1279 62 50 29
Email: sales@jumo.co.uk
Internet: www.jumo.co.uk

JUMO Process Control, Inc.
6733 Myers Road
East Syracuse, NY 13057, USA
Phone: +1 315 437 5866
Fax: +1 315 437 5860
Email: info.us@jumo.net
Internet: www.jumousa.com

Accessories

Designation	Part no.
Stainless steel compression fitting M8 × 1, stainless steel clamping ring for protection tube diameter D = 3 mm	00080810
Stainless steel compression fitting M8 × 1, PTFE clamping ring for protection tube diameter D = 3 mm	00049709
Stainless steel compression fitting M10 × 1, stainless steel clamping ring for protection tube diameter D = 6 mm	00065416
Stainless steel compression fitting G 1/4, stainless steel clamping ring for protection tube diameter D = 6 mm	00080811
Steel compression fitting G 3/8, steel clamping ring for protection tube diameter D = 6 mm	00057945
Stainless steel compression fitting G 3/8, stainless steel clamping ring for protection tube diameter D = 6 mm	00317966
Stainless steel compression fitting G 1/2, stainless steel clamping ring for protection tube diameter D = 6 mm	00305445
Stainless steel compression fitting 1/2-14NPT, stainless steel clamping ring for protection tube diameter D = 6 mm	00444210

JUMO GmbH & Co. KG
Delivery address: Mackenrodtstraße 14
36039 Fulda, Germany
Postal address: 36035 Fulda, Germany
Phone: +49 661 6003-0
Fax: +49 661 6003-607
Email: mail@jumo.net
Internet: www.jumo.net

JUMO Instrument Co. Ltd.
JUMO House
Temple Bank, Riverway
Harlow, Essex CM 20 2DY, UK
Phone: +44 1279 63 55 33
Fax: +44 1279 62 50 29
Email: sales@jumo.co.uk
Internet: www.jumo.co.uk

JUMO Process Control, Inc.
6733 Myers Road
East Syracuse, NY 13057, USA
Phone: +1 315 437 5866
Fax: +1 315 437 5860
Email: info.us@jumo.net
Internet: www.jumousa.com

			(1)	**Basic type**
		902220/40		Screw-in mineral-insulated RTD temperature probe with form B terminal head
		902220/41		Push-in mineral-insulated RTD temperature probe with form B terminal head
			(2)	**Operating temperature in °C**
x	x	150		-200 to +600 °C
x	x	415		-50 to +600 °C (standard)
			(3)	**Measuring insert**
x	x	1001		1× Pt100 in 3-wire circuit
x	x	1003		1× Pt100 in 2-wire circuit (standard for transmitters extra code 330 and 333)
x	x	1011		1× Pt100 in 4-wire circuit (standard for transmitters extra code 331 and 336)
x	x	2001		2× Pt100 in 3-wire circuit
x	x	2003		2× Pt100 in 2-wire circuit
			(4)	**Tolerance class according to DIN EN 60751**
x	x	1		Class B (standard)
x	x	2		Class A
x	x	3		Class AA
			(5)	**Protection tube diameter D in mm**
x	x	3		Ø 3 mm
x	x	6		Ø 6 mm
			(6)	**Insertion length EL/NL in mm (at least 100 mm)**
x	x	...		Specification in plain text
			(7)	**Process connection**
	x	000		None
x		102		Screw connection G 1/4
x		103		Screw connection G 3/8
x		104		Screw connection G 1/2
			(8)	**Extra codes**
x	x	000		None
x	x	058		SIL and PL compatible
x	x	320		Terminal head form BUZ
x	x	330		1× analog transmitter, 4 to 20 mA output, data sheet 707030
x	x	331		1× programmable transmitter, 4 to 20 mA/20 to 4 mA output, data sheet 707010
x	x	333		1× analog transmitter, 0 to 10 V output, data sheet 707030
x	x	336		1× programmable transmitter, 4 to 20 mA/20 to 4 mA output and HART®-interface, data sheet 707010
x	x	550		1× programmable transmitter, 4 to 20 mA/20 to 4 mA output (USB), data sheet 707050

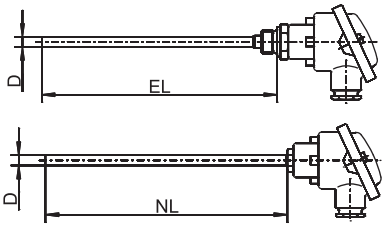

Further versions can be purchased upon request.

	(1)		(2)		(3)		(4)		(5)		(6)		(7)		(8)	
Order code		-		-		-		-		-		-		/		, ...[a]
Order example	902220/40	-	415	-	1003	-	1	-	3	-	100	-	104	/	000	

[a] List extra codes in sequence and separate using commas.

JUMO GmbH & Co. KG
Delivery address: Mackenrodtstraße 14
36039 Fulda, Germany
Postal address: 36035 Fulda, Germany
Phone: +49 661 6003-0
Fax: +49 661 6003-607
Email: mail@jumo.net
Internet: www.jumo.net

JUMO Instrument Co. Ltd.
JUMO House
Temple Bank, Riverway
Harlow, Essex CM 20 2DY, UK
Phone: +44 1279 63 55 33
Fax: +44 1279 62 50 29
Email: sales@jumo.co.uk
Internet: www.jumo.co.uk

JUMO Process Control, Inc.
6733 Myers Road
East Syracuse, NY 13057, USA
Phone: +1 315 437 5866
Fax: +1 315 437 5860
Email: info.us@jumo.net
Internet: www.jumousa.com

Accessories

Designation	Part no.
Stainless steel compression fitting M8 × 1, stainless steel clamping ring for protection tube diameter D = 3 mm	00080810
Stainless steel compression fitting M8 × 1, PTFE clamping ring for protection tube diameter D = 3 mm	00049709
Stainless steel compression fitting M10 × 1, stainless steel clamping ring for protection tube diameter D = 6 mm	00065416
Stainless steel compression fitting G 1/4, stainless steel clamping ring for protection tube diameter D = 6 mm	00080811
Steel compression fitting G 3/8, steel clamping ring for protection tube diameter D = 6 mm	00057945
Stainless steel compression fitting G 3/8, stainless steel clamping ring for protection tube diameter D = 6 mm	00317966
Stainless steel compression fitting G 1/2, stainless steel clamping ring for protection tube diameter D = 6 mm	00305445
Stainless steel compression fitting 1/2-14NPT, stainless steel clamping ring for protection tube diameter D = 6 mm	00444210
Steel sheet flange for protection tube diameter D = 6 mm	00065062
USB cable, A connector to Mini-B connector, length 3 m	00506252
PC interface with USB/TTL converter	00456352
Setup program dTRANS T01 (707010)	00378733
Setup program dTRANS T05 (707050/51)	00574959

JUMO GmbH & Co. KG
Delivery address: Mackenrodtstraße 14
36039 Fulda, Germany
Postal address: 36035 Fulda, Germany
Phone: +49 661 6003-0
Fax: +49 661 6003-607
Email: mail@jumo.net
Internet: www.jumo.net

JUMO Instrument Co. Ltd.
JUMO House
Temple Bank, Riverway
Harlow, Essex CM 20 2DY, UK
Phone: +44 1279 63 55 33
Fax: +44 1279 62 50 29
Email: sales@jumo.co.uk
Internet: www.jumo.co.uk

JUMO Process Control, Inc.
6733 Myers Road
East Syracuse, NY 13057, USA
Phone: +1 315 437 5866
Fax: +1 315 437 5860
Email: info.us@jumo.net
Internet: www.jumousa.com

			(1)	**Basic type**
		902230/40		Screw-in mineral-insulated RTD temperature probe with form J terminal head
		902230/41		Push-in mineral-insulated RTD temperature probe with form J terminal head
			(2)	**Operating temperature in °C**
x	x	150		-200 to +600 °C
x	x	415		-50 to +600 °C (standard)
			(3)	**Measuring insert**
x	x	1001		1× Pt100 in 3-wire circuit
x	x	1003		1× Pt100 in 2-wire circuit (standard for transmitters extra code 330)
x	x	1011		1× Pt100 in 4-wire circuit
x	x	2003		2× Pt100 in 2-wire circuit
			(4)	**Tolerance class according to DIN EN 60751**
x	x	1		Class B (standard)
x	x	2		Class A
x	x	3		Class AA
			(5)	**Protection tube diameter D in mm**
x	x	3		Ø 3 mm
x	x	6		Ø 6 mm
			(6)	**Insertion length EL/NL in mm (at least 100 mm)**
x	x	...		Specification in plain text
			(7)	**Process connection**
	x	000		None
x		102		Screw connection G 1/4
x		104		Screw connection G 1/2
x		105		Screw connection G 3/4
			(8)	**Extra codes**
x	x	000		None
x	x	058		SIL and PL compatible
x	x	330		1× analog transmitter, 4 to 20 mA output, data sheet 707030

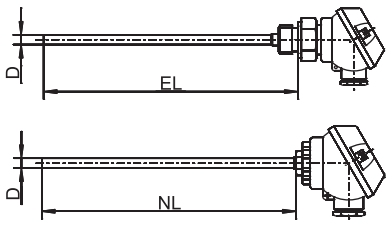

Further versions can be purchased upon request.

	(1)		(2)		(3)		(4)		(5)		(6)		(7)		(8)
Order code		-		-		-		-		-		-		/	
Order example	902230/40	-	415	-	1001	-	1	-	3	-	100	-	104	/	000

JUMO GmbH & Co. KG
Delivery address: Mackenrodtstraße 14
36039 Fulda, Germany
Postal address: 36035 Fulda, Germany
Phone: +49 661 6003-0
Fax: +49 661 6003-607
Email: mail@jumo.net
Internet: www.jumo.net

JUMO Instrument Co. Ltd.
JUMO House
Temple Bank, Riverway
Harlow, Essex CM 20 2DY, UK
Phone: +44 1279 63 55 33
Fax: +44 1279 62 50 29
Email: sales@jumo.co.uk
Internet: www.jumo.co.uk

JUMO Process Control, Inc.
6733 Myers Road
East Syracuse, NY 13057, USA
Phone: +1 315 437 5866
Fax: +1 315 437 5860
Email: info.us@jumo.net
Internet: www.jumousa.com

Accessories

Designation	Part no.
Stainless steel compression fitting M8 × 1, stainless steel clamping ring for protection tube diameter D = 3 mm	00080810
Stainless steel compression fitting M8 × 1, PTFE clamping ring for protection tube diameter D = 3 mm	00049709
Stainless steel compression fitting M10 × 1, stainless steel clamping ring for protection tube diameter D = 6 mm	00065416
Stainless steel compression fitting G 1/4, stainless steel clamping ring for protection tube diameter D = 6 mm	00080811
Steel compression fitting G 3/8, steel clamping ring for protection tube diameter D = 6 mm	00057945
Stainless steel compression fitting G 3/8, stainless steel clamping ring for protection tube diameter D = 6 mm	00317966
Stainless steel compression fitting G 1/2, stainless steel clamping ring for protection tube diameter D = 6 mm	00305445
Stainless steel compression fitting 1/2-14NPT, stainless steel clamping ring for protection tube diameter D = 6 mm	00444210
Steel sheet flange for protection tube diameter D = 6 mm	00065062

JUMO GmbH & Co. KG
Delivery address: Mackenrodtstraße 14
36039 Fulda, Germany
Postal address: 36035 Fulda, Germany
Phone: +49 661 6003-0
Fax: +49 661 6003-607
Email: mail@jumo.net
Internet: www.jumo.net

JUMO Instrument Co. Ltd.
JUMO House
Temple Bank, Riverway
Harlow, Essex CM 20 2DY, UK
Phone: +44 1279 63 55 33
Fax: +44 1279 62 50 29
Email: sales@jumo.co.uk
Internet: www.jumo.co.uk

JUMO Process Control, Inc.
6733 Myers Road
East Syracuse, NY 13057, USA
Phone: +1 315 437 5866
Fax: +1 315 437 5860
Email: info.us@jumo.net
Internet: www.jumousa.com

						(1)	**Basic type**
					902250/30		Mineral-insulated RTD temperature probe with PVC connecting cable (line temperature range -5 to +80 °C (+105 °C))
					902250/32		Mineral-insulated RTD temperature probe with silicone connecting cable (line temperature range -50 to +180 °C)
					902250/33		Mineral-insulated RTD temperature probe with PTFE connecting cable (line temperature range -190 to +260 °C)
					902250/34		Mineral-insulated RTD temperature probe with metal-braiding connecting cable (line temperature range -50 to +350 °C)
					902250/35		Mineral-insulated RTD temperature probe with metal-braiding connecting cable (line temperature range -50 to +260 °C)
						(2)	**Operating temperature in °C**
x	x	x	x	x	150		-200 to +600 °C
x	x	x	x	x	415		-50 to +600 °C (standard)
						(3)	**Measuring insert**
x	x	x	x	x	1001		1× Pt100 in 3-wire circuit
x	x	x	x	x	1003		1× Pt100 in 2-wire circuit
x	x	x	x	x	1005		1× Pt1000 in 2-wire circuit (only for operating temperature -50 to +600 °C)
x	x	x	x	x	1006		1× Pt1000 in 3-wire circuit (only for operating temperature -50 to +600 °C)
x	x	x	x	x	1011		1× Pt100 in 4-wire circuit
	x	x	x	x	2001		2× Pt100 in 3-wire circuit (only in combination with protection tube diameter 3 and 6 mm)
x	x	x	x	x	2003		2× Pt100 in 2-wire circuit (only in combination with protection tube diameter 3 and 6 mm)
						(4)	**Tolerance class according to DIN EN 60751**
x	x	x	x	x	1		Class B (standard)
x	x	x	x	x	2		Class A
x	x	x	x	x	3		Class AA
						(5)	**Protection tube diameter D in mm**
x	x	x	x	x	1.9		Ø 1.9 mm (sheath cable Ø 1.5 mm)
x	x	x	x	x	3		Ø 3 mm
x	x	x	x	x	6		Ø 6 mm
						(6)	**Insertion length EL in mm (at least 70 mm)**
x	x	x	x	x	...		Specification in plain text
						(7)	**Connecting cable end**
x	x	x	x	x	11		Ferrules according to DIN 46228 Part 4 (standard)
x	x	x	x	x	80		Multi-pole connector (enter type in plain text)
						(8)	**Connecting cable length AL in mm**
x	x	x	x	x	...		Specification in plain text
						(9)	**Extra codes**
x	x	x			000		None
x	x	x	x	x	058		SIL and PL compatible
x	x	x	x	x	317		Shielded connecting cable (standard for basic type 902250/34 and 902250/35)

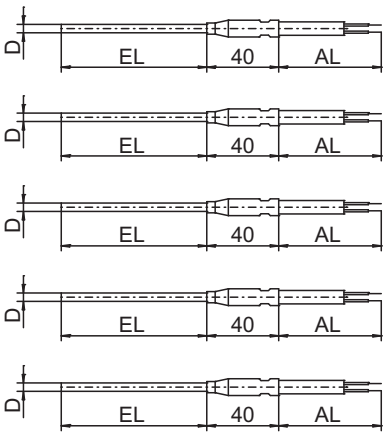

Further versions can be purchased upon request.

	(1)		(2)		(3)		(4)		(5)		(6)		(7)		(8		(9)
Order code		-		-		-		-		-		-		-		/	
Order example	902250/32	-	415	-	1001	-	1	-	3	-	200	-	11	-	2500	/	000

JUMO GmbH & Co. KG
Delivery address: Mackenrodtstraße 14
36039 Fulda, Germany
Postal address: 36035 Fulda, Germany
Phone: +49 661 6003-0
Fax: +49 661 6003-607
Email: mail@jumo.net
Internet: www.jumo.net

JUMO Instrument Co. Ltd.
JUMO House
Temple Bank, Riverway
Harlow, Essex CM 20 2DY, UK
Phone: +44 1279 63 55 33
Fax: +44 1279 62 50 29
Email: sales@jumo.co.uk
Internet: www.jumo.co.uk

JUMO Process Control, Inc.
6733 Myers Road
East Syracuse, NY 13057, USA
Phone: +1 315 437 5866
Fax: +1 315 437 5860
Email: info.us@jumo.net
Internet: www.jumousa.com

Accessories

Designation	Part no.
Stainless steel compression fitting M8 × 1, stainless steel clamping ring for protection tube diameter D = 3 mm	00080810
Stainless steel compression fitting M8 × 1, PTFE clamping ring for protection tube diameter D = 3 mm	00049709
Stainless steel compression fitting M10 × 1, stainless steel clamping ring for protection tube diameter D = 6 mm	00065416
Stainless steel compression fitting G 1/4, stainless steel clamping ring for protection tube diameter D = 6 mm	00080811
Steel compression fitting G 3/8, steel clamping ring for protection tube diameter D = 6 mm	00057945
Stainless steel compression fitting G 3/8, stainless steel clamping ring for protection tube diameter D = 6 mm	00317966
Stainless steel compression fitting G 1/2, stainless steel clamping ring for protection tube diameter D = 6 mm	00305445
Stainless steel compression fitting 1/2-14NPT, stainless steel clamping ring for protection tube diameter D = 6 mm	00444210

JUMO GmbH & Co. KG
Delivery address: Mackenrodtstraße 14
36039 Fulda, Germany
Postal address: 36035 Fulda, Germany
Phone: +49 661 6003-0
Fax: +49 661 6003-607
Email: mail@jumo.net
Internet: www.jumo.net

JUMO Instrument Co. Ltd.
JUMO House
Temple Bank, Riverway
Harlow, Essex CM 20 2DY, UK
Phone: +44 1279 63 55 33
Fax: +44 1279 62 50 29
Email: sales@jumo.co.uk
Internet: www.jumo.co.uk

JUMO Process Control, Inc.
6733 Myers Road
East Syracuse, NY 13057, USA
Phone: +1 315 437 5866
Fax: +1 315 437 5860
Email: info.us@jumo.net
Internet: www.jumousa.com

Stock versions

Order code	Part no.
902250/32-150-1011-1-1.9-300-11-2500/000	00066531
902250/32-415-1003-1-3-100-11-2500/000	00068243
902250/32-415-1003-1-3-200-11-2500/000	00068244
902250/32-415-1003-1-3-300-11-2500/000	00055763
902250/32-415-1001-1-3-100-11-2500/000	00068247
902250/32-415-1001-1-3-300-11-2500/000	00055764
902250/32-415-1001-1-3-500-11-2500/000	00068248
902250/32-415-1001-1-6-300-11-2500/000	00055767
902250/32-415-1001-1-6-500-11-2500/000	00068250

Order code	Part no.
902230/40-415-1003-1-3-100-104/000	00066731
902230/40-415-1003-1-3-300-104/000	00057512
902230/40-415-1003-1-6-200-104/000	00068252
902230/40-415-1003-1-6-300-104/000	00055775